ELYSIUM

DFMStudio

Check Criteria Guide (For Plastic)

Parameter Settings on Feature Recognition & DFM Check

Jan. 2022
Elysium Co. Ltd.

© 2022 Elysium – Confidential & Proprietary

Index

Check Criteria

1. Wall thickness
2. Boss
3. Rib
4. Sharp edge
5. Tiny fillet
6. Undercut
7. Wall thickness (Mold)
8. Hole
9. Draft angle
10. Model information

Feature Recognition

- Draft direction
- Round hole
- Fillet
- Boss
- Rib
- Wall thickness
- Wall thickness (Mold)
- Sharp edge
- Undercut
- Draft angle

Appendix

© 2022 Elysium – Confidential & Proprietary

Check Criteria

Parameters and the Judgment Value

© 2022 Elysium – Confidential & Proprietary

Index: Check Criteria List -1

1. Wall thickness
   - 1.1 Thick wall
   - 1.2 Thin wall
2. Boss
   - Boss: Draft angle
   - Boss: Side to base thickness ratio
   - Boss: Bottom to base thickness ratio
   - Boss: Height to outer diameter ratio
   - Boss: Tip width
   - Boss: Root fillet radius
   - Other parameters related to Boss
3. Rib
   - Rib: Draft angle
   - Rib: Height to base thickness ratio
   - Rib: Root to base thickness ratio
   - Rib: Tip width
   - Rib: Height to tip width ratio
   - Rib: Root fillet radius
   - Rib: Tip fillet radius
   - Other parameters related to Rib
4. Sharp Edge
   - 4.1 Convex sharp edge (Product)
   - 4.2 Concave sharp edge (Mold)
5. Tiny fillet
   - 5.1 Tiny convex fillet (Product)
   - 5.2 Tiny concave fillet (Mold)
6. Undercut
   - 6.1 Undercut
   - 6.2 Slide stroke length

© 2022 Elysium – Confidential & Proprietary

Index: Check Criteria List -2

7. Wall thickness (Mold)

7.1 Thin wall (Mold)

8. Hole

8.1 Hole: Pilot hole diameter
8.2 Hole: Chamfer width
8.3 Hole: Through or blind
8.4 Hole: Depth to pilot hole diameter ratio
8.5 Hole: Distance between holes
8.6 Hole: Hole information

9. Draft angle

9.1 Draft angle

10. Model information

A.1 Bounding box size
A.2 Volume
A.3 Projection area size
A.4 Bounding box size (XYZ)
A.5 Projection area size (XYZ)

© 2022 Elysium – Confidential & Proprietary

Wall Thickness

© 2022 Elysium – Confidential & Proprietary

ELYSIUM

1. Wall thickness inspection

Description of Check Criterion & Possible Molding Defects

<Summary>
Inspect the model wall thickness, checks for thick wall and thin wall.

⚠ Design quality considering moldability
Wall thickness is a factor that greatly affects the moldability of plastic parts. Recommended wall thickness range differs depending on the material used, and the presence of molding defects depends on the degree of thick wall and thin wall with respect to the average wall thickness of the model.

Summary of the Inspection Item Setting

Following inspection criteria can be set with the 'DFM Studio Parameter Settings Tool' for administrators.
<Standard Thickness>
Able to set whether to manually enter or automatically calculated.
Specify in the [DFMS.THICKNESS.RECOGNITION] section of the parameter file in the following way.
To manually enter the standard thickness: StdThickness=wall thickness value
To automatically calculate standard thickness: StdThickness=-1
<Max. deviation (+)>
Able to set the ratio of designed upper threshold (for thick wall) based on the standard thickness.
<Max. deviation (-) >
Able to set the ratio of designed lower threshold (for thin wall) based on the standard thickness.
<Material>
When you select a material, the upper and lower thresholds of each material are set.
In addition, the upper and lower thresholds can be set with the 'Material_Plastic' sheet in the 'DFM Studio Parameter Settings Tool'.

Summary of the Inspection Item Setting

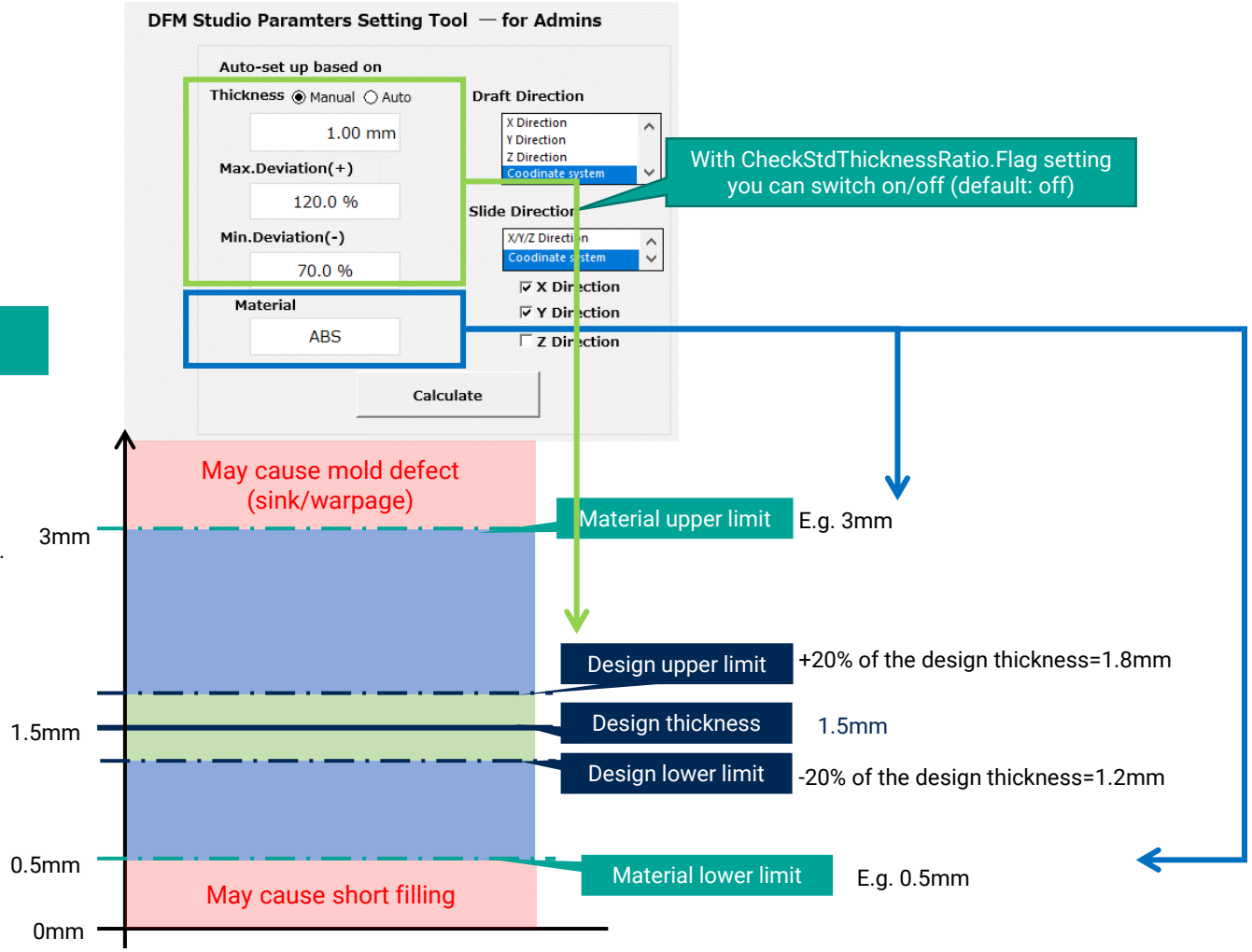

© 2022 Elysium – Confidential & Proprietary

Inspection item: 1.1 Thick wall

Description of Check Criterion & Possible Molding Defects

<Description>

Detect thick wall in the model.

If thick wall is present, molding defects (sink marks, voids, warpage, etc.) may occur due to shrinkage of the plastic. Consider the geometry of the plastic part so that the thickness is within a certain range.

1. How to Check & Prerequisites

<How to Check>

Verify the thickness (T) against the threshold value, and indicate the priority based on thickness.

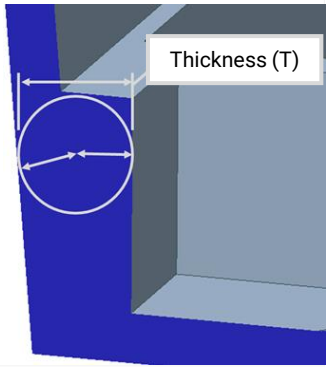

<Prerequisites>

Geometry recognition is completed on "Wall thickness".

2. How to Judge & Default Value

<How to Judge>

Priority: High: Thickness (T)>Thickness.Max, where it is above the material limit.
Priority: Mid: Thickness.Max>=Thickness (T)>design upper limit. (*)

<Default Value>

- Thickness.Max=3.5mm Set by the material selected
- StdThicknessRatio.Max=1.2 Use for calculating the design upper limit

3. How to Analyze Check Result in Inspector / Model Viewer (Overview)

The check result will be listed in Item List of Inspector. Click a checked area to highlight it in Model Viewer. Checked areas are classified by the priority level (High / Mid) as follows.

View operation command		Description
Highlight Checked Area	• Red:	[Fail] 'Priority: High' portion
	• Gradation of white to pink (*):	[Fail] 'Priority: Mid' portion

(*) Enable "Whether to calculate deviation (+) from standard thickness" parameter to detect 'Priority: Mid' areas as well. Please refer to 1.3 Other parameters for the details.

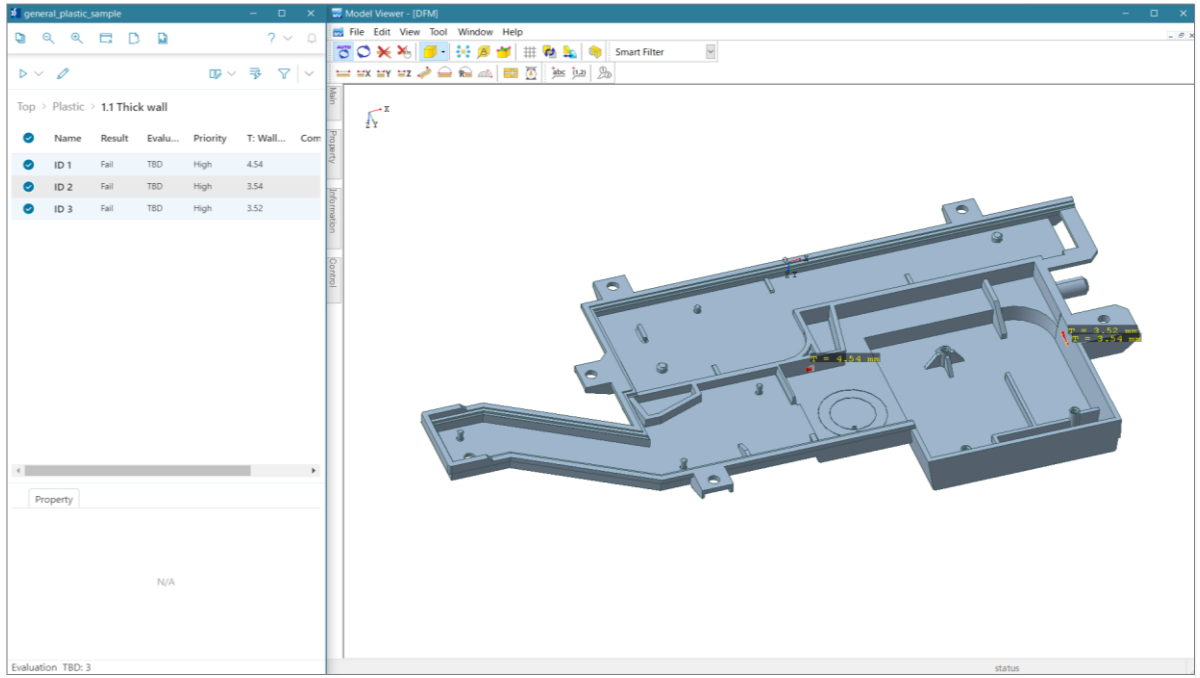

© 2022 Elysium – Confidential & Proprietary

ELYSIUM

Inspection item: 1.1 Thick wall

4. How to Analyze Check Result in Inspector / Model Viewer (Details)

Click a checked area in Item List of Inspector to show the check result in Property List.
Also, right-click a checked area in Item List, and select following view commands from the context menu to analyze in Model Viewer.

View operation command	Description	
Highlight Checked Area	• Red: • Gradation of white to pink:	[Fail] 'Priority: High' portion [Fail] 'Priority: Mid' portion
Highlight Checked Area (Without Dimension)	Highlights the checked areas as described above, but hides dimensions.	
Fit to Checked Area	Fits to the selected checked area.	
Section View	Shows the selected checked area in section view.	
Hide Surroundings	Hides the faces for surroundings to show the selected checked area only.	
Section View + Hide Surroundings	Hides the faces for surroundings in section view.	
Simple View	Shows in simple view, canceling the applied highlighting and/or section view.	
Show Selected Only	Filters checked areas in Item List to the selected ones only.	
Edit Property	Opens a window to update Evaluation property, add a comment, etc.	

Highlight Checked Area – Priority: High

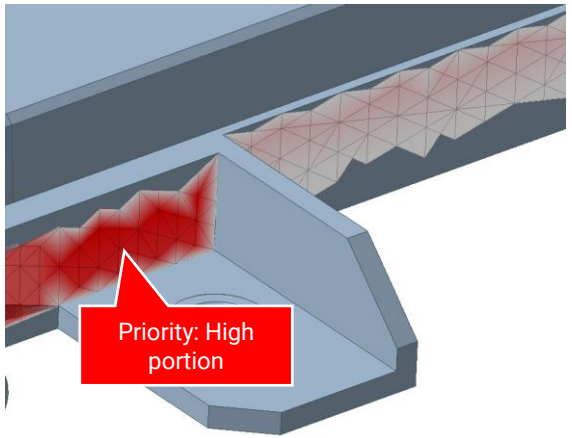

Highlight Checked Area – Priority: Medium

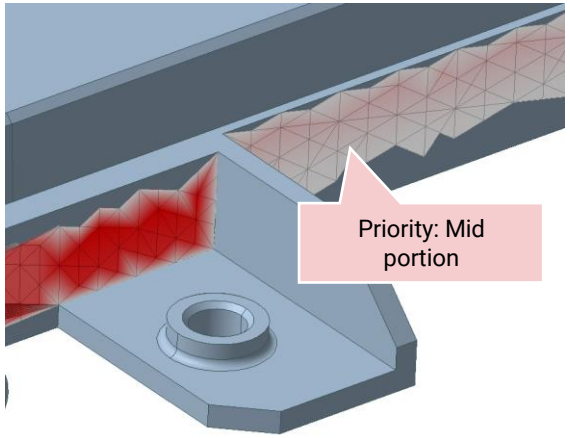

Section View

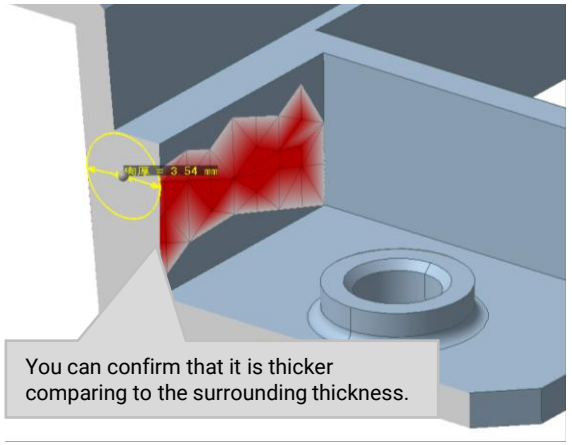

Hide Surroundings

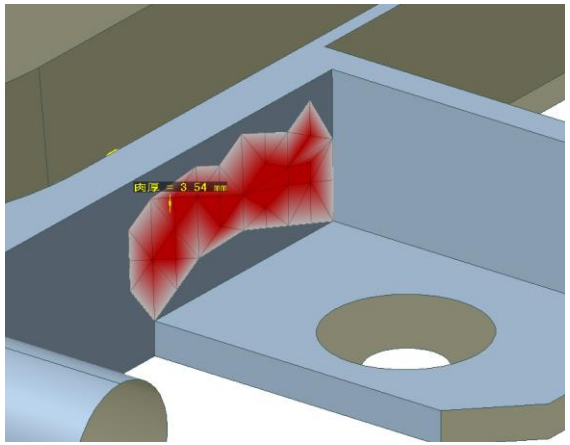

© 2022 Elysium – Confidential & Proprietary

Inspection item: 1.2 Thin wall

Description of Check Criterion & Possible Molding Defects

<Description>

Detect thin wall in the model.

If thin wall is present, plastic filled in the thin part solidifies quickly, which can cause molding defects (short filling, overfilled, etc.) Consider the geometry of the plastic part so that the thickness is within a certain range.

1. How to Check & Prerequisites

<How to Check>

Verify the thickness (T) against the threshold value, and indicate the priority based on thickness.

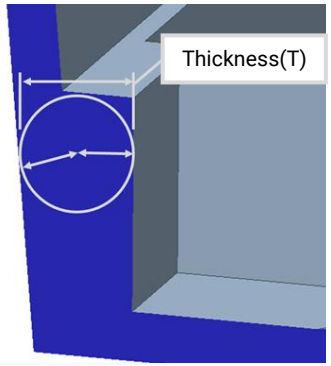

<Prerequisites>

Geometry recognition is completed on 'Wall thickness'.

2. How to Judge & Default Value

<How to Judge>

Priority: High: Thickness (T)<Thickness.Min, where it is above the material limit.
Priority: Mid: Thickness.Min<Thickness (T)<=design lower limit. (*)

<Default Value>

- Thickness.Min=1.1mm Set by the material selected
- StdThicknessRatio.Min=0.8 Use for calculating the design lower limit

3. How to Analyze Check Result in Inspector / Model Viewer (Overview)

The check result will be listed in Item List of Inspector. Click a checked area to highlight it in Model Viewer. Checked areas are classified by the priority level (High / Mid) as follows.

View operation command	Description	
Highlight Checked Area	• Blue:	[Fail] 'Priority: High' portion
	• Gradation of white to light blue (*):	[Fail] 'Priority: Mid' portion

(*) Enable "Whether to calculate deviation (-) from standard thickness" parameter to detect 'Priority: Mid' areas as well. Please refer to 1.3 Other parameters for the details.

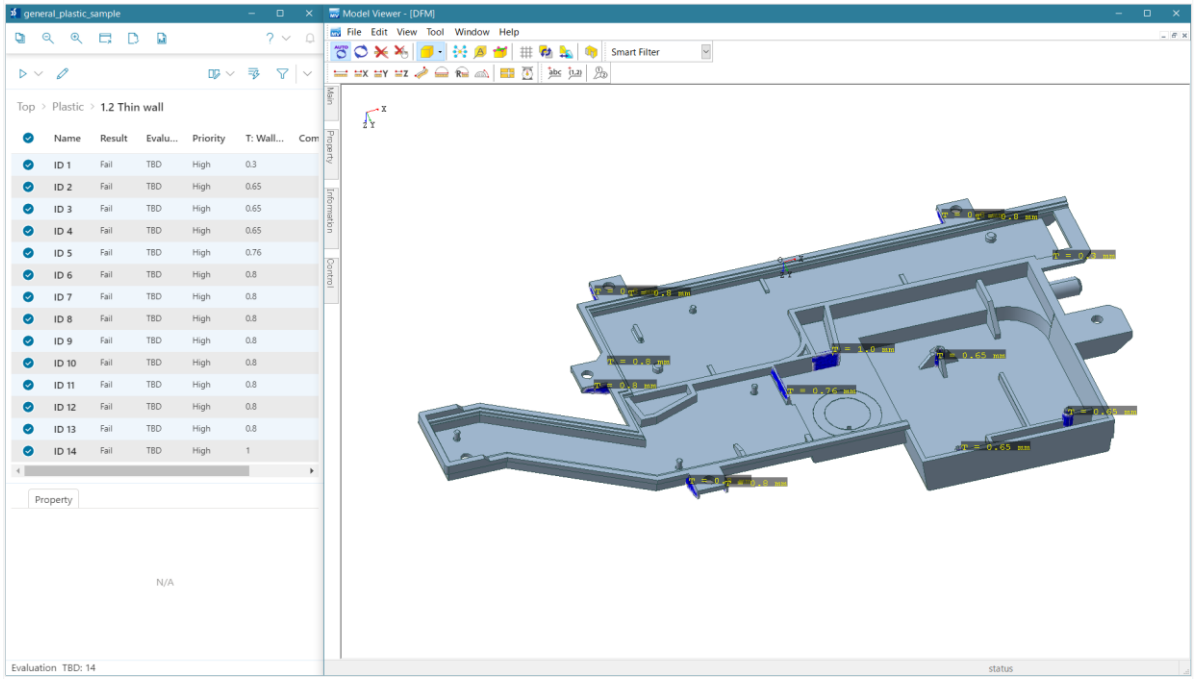

© 2022 Elysium – Confidential & Proprietary

ELYSIUM

Inspection item: 1.2 Thin wall

4. How to Analyze Check Result in Inspector / Model Viewer (Details)

Click a checked area in Item List of Inspector to show the check result in Property List.
Also, right-click a checked area in Item List, and select following view commands from the context menu to analyze in Model Viewer.

View operation command	Description	
Highlight Checked Area	• Blue: • Gradation of white to light blue:	[Fail] 'Priority: High' portion [Fail] 'Priority: Mid' portion
Highlight Checked Area (Without Dimension)	Highlights the checked areas as described above, but hides dimensions.	
Fit to Checked Area	Fits to the selected checked area.	
Section View	Shows the selected checked area in section view.	
Hide Surroundings	Hides the faces for surroundings to show the selected checked area only.	
Section View + Hide Surroundings	Hides the faces for surroundings in section view.	
Simple View	Shows in simple view, canceling the applied highlighting and/or section view.	
Show Selected Only	Filters checked areas in Item List to the selected ones only.	
Edit Property	Opens a window to update Evaluation property, add a comment, etc.	

Highlight Checked Area – Priority: High

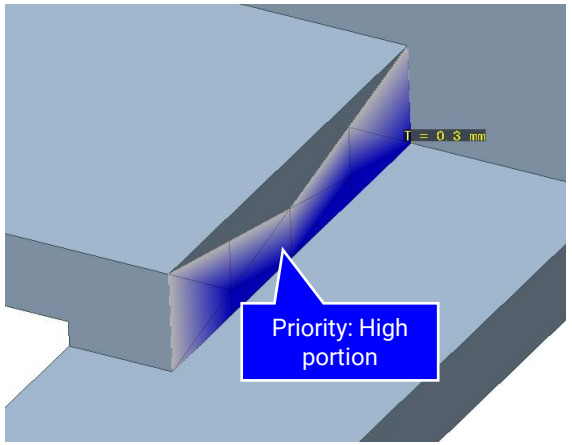

Highlight Checked Area – Priority: Medium

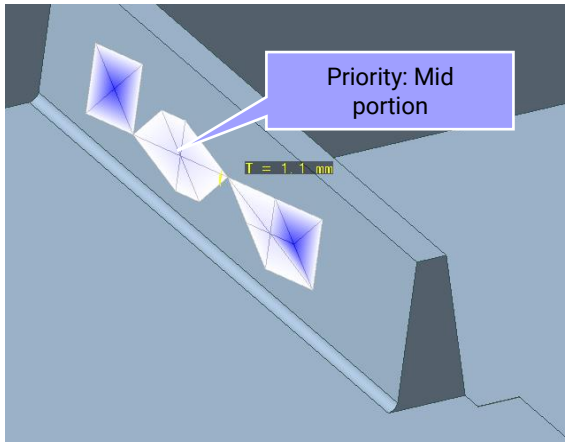

Section View

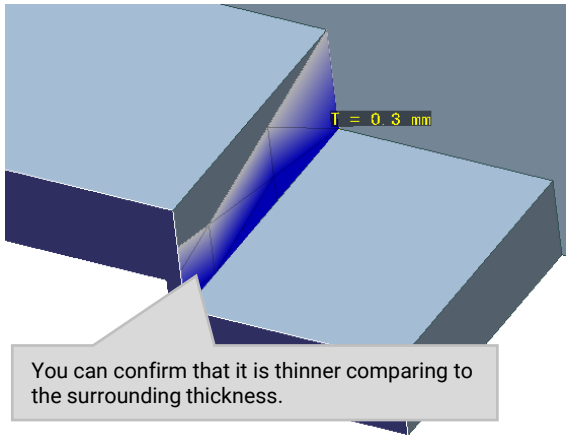

Hide Surroundings

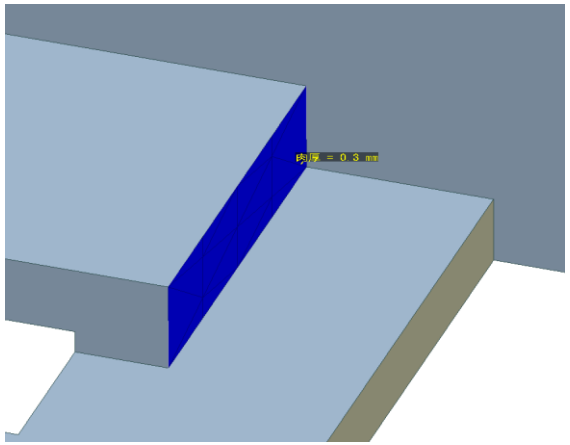

© 2022 Elysium – Confidential & Proprietary

1.3 Other parameters related to wall thickness & material table

Face recognition when wall thickness is detected

<Parameter description>
Min. value of the angle between the faces when recognizing the wall thickness
<Initial value>
Thick wall | Target by min. angle tol between faces=130.0°
Thin wall | Target by min. angle tol between faces=130.0°

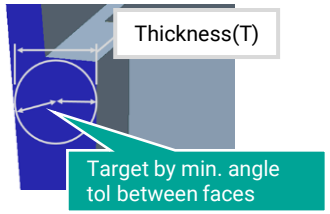

Setting the detection for 'Priority: Mid'

<Parameter description>
Based on the design wall thickness (automatic calculation), 'design upper limit' and 'design lower limit' for thickness are defined and the corresponding thickness for 'Priority: Mid' are detected.
<Initial value>
Whether to calculate deviation (+) from standard thickness: CheckStdThicknessRatio.Flag=false
Max. deviation (+) tol from standard thickness: StdThicknessRatio.Max=1.2
Max. deviation (-) tol from standard thickness: StdThicknessRatio.Min=0.8

Adjust the thin wall detection at the tip

<Parameter description>
Set whether to detect the thin wall at the tip of the model. By default, thin wall at these location are detected.
<Initial value>
Whether to exclude tips: AvoidTipThickness.Flag=false
Exclude tip | Max. creepage distance tol by ratio to wall thickness: GeodesicDistRatio.Max=3.0
<Reference>
Wall thickness * Design lower limit of thickness * Geodesic_dist_ratio_max>creepage distance, it is judged as end of the part.

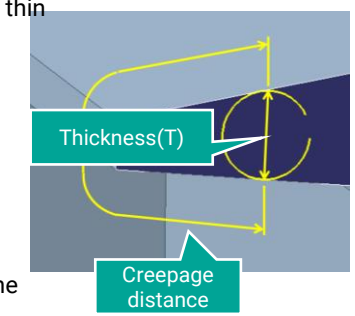

Material table

<Parameter description>
Recommended wall thickness range and minimum draft angle used for wall thickness verification vary depending on the material. In DFM, it uses the material table of the 'DFM Studio Parameter Settings Tool' for wall thickness inspection.

<Initial value>
Material table example

Material	Min. thickness	Max. thickness	Draft Angle
ABS	1.1	3.5	0.5
ABS+GF	1.1	3.5	1
HDPE	0.7	5	0.5
HDPE+GF	0.7	5	1
PP	0.6	3.8	0.5
PP+GF	0.6	3.8	1
PMMA	0.6	3.8	0.5
PS	0.8	3.8	0.5
PA	0.7	2.9	0.5
PA+GF	0.7	2.9	1
POM	0.7	3	0.5
POM+GF	0.7	3	1
PC	1	3.1	0.5
PC+GF	1	3.1	1
PET	0.5	4.5	0.5

© 2022 Elysium – Confidential & Proprietary

Boss

© 2022 Elysium – Confidential & Proprietary

ELYSIUM

Inspection item: 2. Boss

Description of Check Criterion & Possible Molding Defects

<Summary>

In boss inspection, you can confirm the inspection results such as boss height, thickness ratio, and draft angle in a list.

Molding defects

Depending on the size of boss and the location placed, various molding defects such as sink marks, shrinkage, poor release of the mold could occur. Confirm whether the boss is designed with proper dimensions with DFM Studio and take measures to prevent molding defects in advance.

1. Inspection items

Inspection items related to boss are as follows. For details, please check the explanation page for each item.

<2.1 Boss: Draft angle>

Result is displayed in the Θ column of the item list. If the draft angle is below the threshold value, it is judged as FAIL.

<2.2 Boss: Side to base thickness ratio>

Result is displayed in the t column of the item list. If the ratio is above the threshold value, it is judged as FAIL.

<2.3 Boss: Bottom to base thickness ratio>

Result is displayed in the T column of the item list. If the ratio is above the threshold value, it is judged as FAIL.

<2.4 Boss: Height to outer diameter ratio>

Result is displayed in the H column of the item list. If the ratio is above the threshold value, it is judged as FAIL.

<2.5 Boss: Tip width>

Result is displayed in the w column of the item list. If the tip width is below the threshold value, it is judged as FAIL.

<2.6 Boss: Root fillet radius>

Result is displayed in the R column of the item list. If the root fillet radius is out of the threshold value, it is judged as FAIL.

2. Inspection results

Inspection results will be listed in Item List of Inspector and the overall result of each is listed in the result column. When you click on the left of 'Name', all target inspection results will be highlighted. If the result is FAIL for one of the six types of inspection items, the boss result will be FAIL. The boss result is mark as PASS when all the results are PASS.

View operation command	Description
Highlight Checked Area	Green: PASS results Red: FAIL results

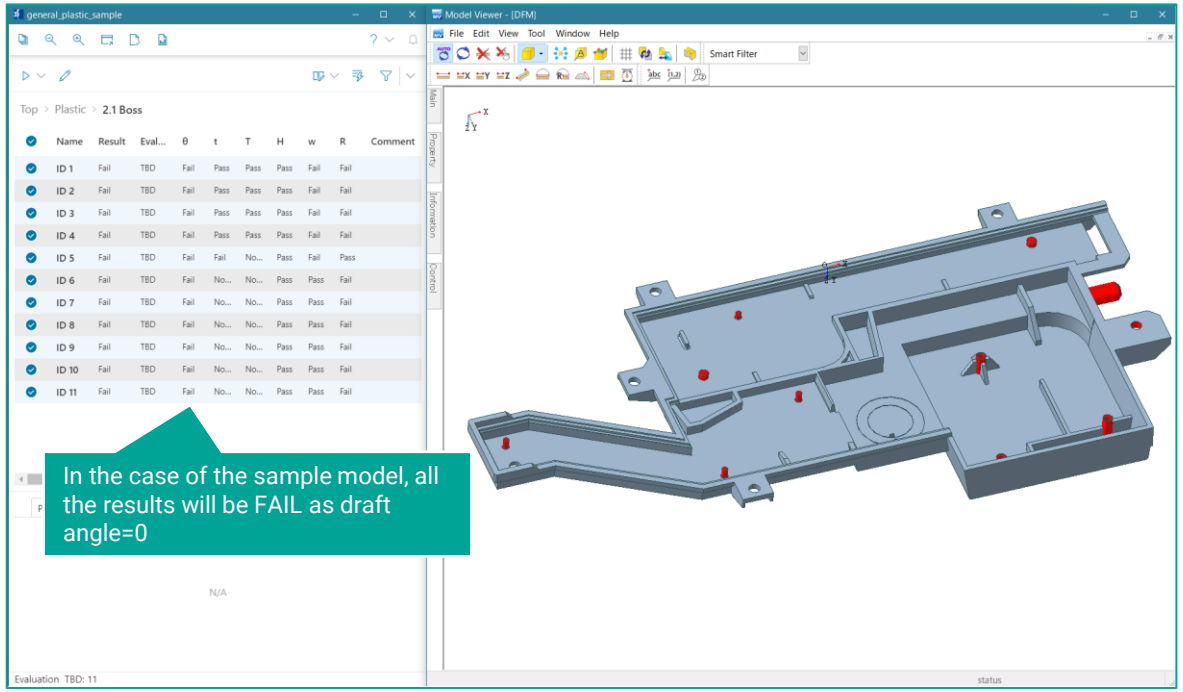

© 2022 Elysium – Confidential & Proprietary

Inspection item: 2. Boss

4. How to Analyze Check Result in Inspector / Model Viewer (Details)

Click a checked area in Item List of Inspector to show the check result in Property List. Also, right-click a checked area in Item List, and select following view commands from the context menu to analyze the selected checked area in Model Viewer.

View operation command	Description
Highlight Checked Area	Green: PASS results Red: FAIL results
Highlight Checked Area (Without Dimension)	Hide dimensions when highlighted
Fit to Checked Area	Fit to the target checked area
Section View	Section view of the target part
Section View: Draft Angle (Θ)	Draft angle result and formula are displayed in section view
Section View: Side Thickness (t)	Side to base thickness ratio result and formula are displayed in section view
Section View: Bottom Thickness (T)	Bottom to base thickness ratio result and formula are displayed in section view
Section View: Height (H)	Height to outer diameter ratio result and formula are displayed in section view
Section View: Tip Width (w)	Tip width and formula are displayed in section view
Section View: Root Fillet Radius (R)	Root fillet radius result and formula are displayed in section view
Hide Surroundings	Only faces around the target part are displayed
Section View + Hide Surroundings	Display section view with only faces around the target part.
Simple View	Reset the selected View operation command
Show Selected Only	Only the selected boss is displayed in the list (filtering functionality)
Edit Property	Screen for adding evaluation and comments will be displayed

Fit to Checked Area

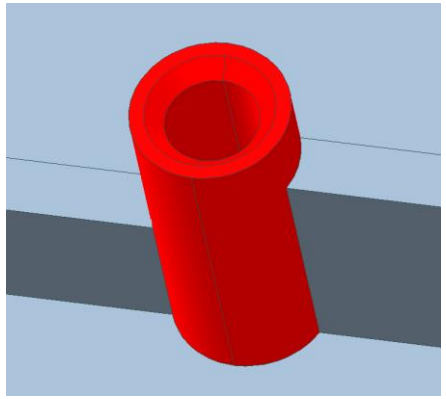

Section View

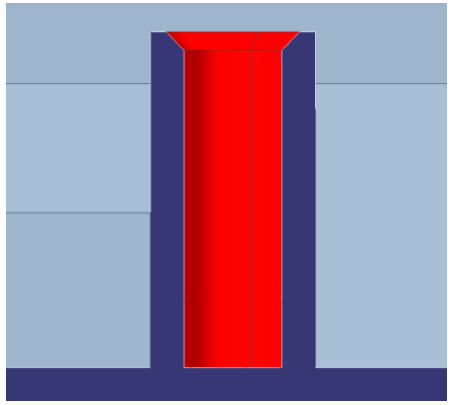

Hide Surroundings

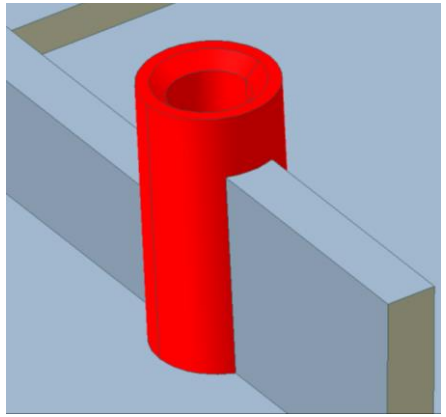

Section View + Hide Surroundings

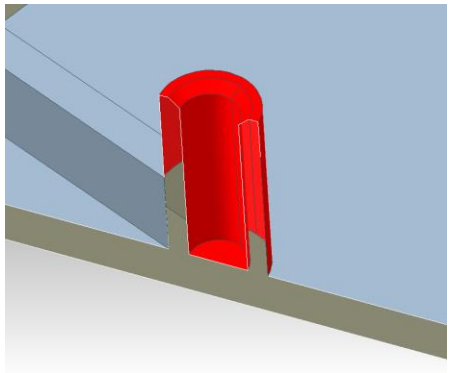

© 2022 Elysium – Confidential & Proprietary

2.1 Boss: Draft angle

Description of Check Criterion & Possible Molding Defects

<Description>

Calculate the draft angle of each boss and detect the bosses below the threshold.

Lack of draft angles will likely lead to issues when releasing mold (damage molds, etc.). DFM Studio provides a functionality to set the draft angle for each material. Please refer to 1.3 Other parameters for the details.

1. How to Check & Prerequisites

<How to Check>

Verify the boss outer diameter draft angle (Θ) is greater than the minimum threshold.

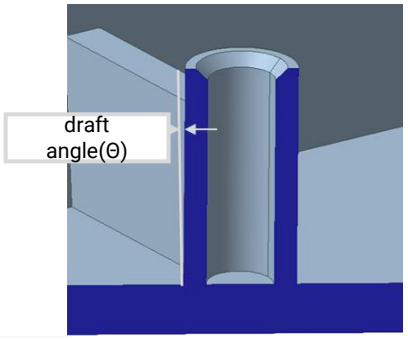

<Prerequisites>

Geometry recognition is completed on 'Boss'.

2. How to Judge & Default Value

<How to Judge>

If Θ<BossDraftAngle.Min, it is judged as FAIL.

<Default Value>

- Boss | Min. draft angle tol
- BossDraftAngle.Min=0.5°

3. How to Analyze Check Result in Inspector / Model Viewer (Overview)

The check result will be listed in Item List of Inspector. Click a checked area to highlight it in Model Viewer.

Inspection results can be confirmed in detail for each target boss in the property, highlight display as well as section view, etc.

Section View: Draft Angle (Θ)	Draft angle result and formula are displayed in section view

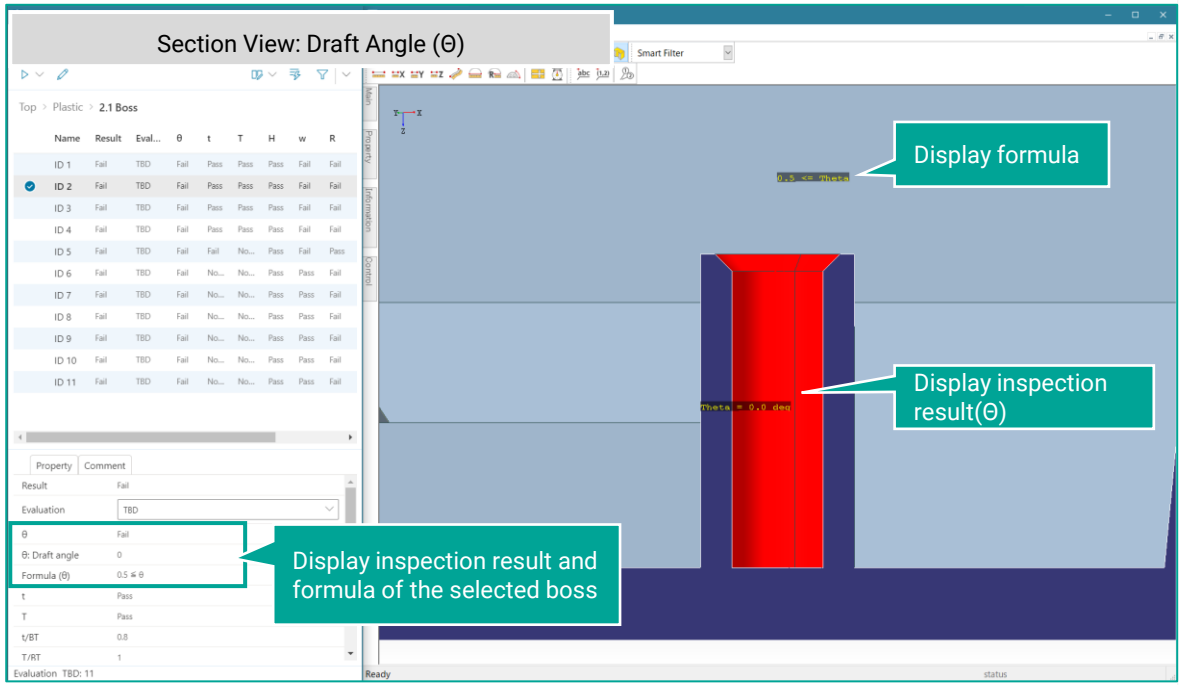

© 2022 Elysium – Confidential & Proprietary

2.2 Boss: Side to base thickness ratio

Description of Check Criterion & Possible Molding Defects

<Summary>

Detect areas where the thickness at the base of the boss is greater than the threshold value.

Molding Defects

If the side thickness (t) is greater than the threshold value of base thickness(BT), molding defects such as sink marks, voids, etc. might occur.

1. How to Check & Prerequisites

<How to Check>

Verify the ratio of the side thickness (t) to the base thickness (BT) is below the threshold value.

<Prerequisites>

Geometry recognition is completed on 'Boss'.

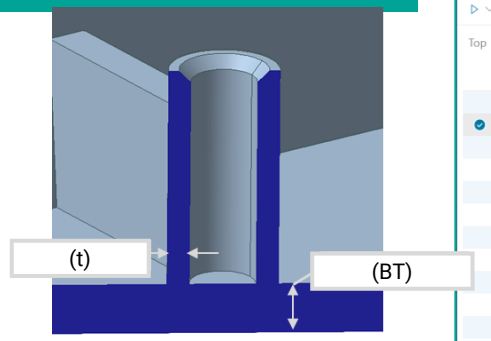

2. How to Judge & Default Value

<Default Value>
Boss | Max. side to base thickness ratio tol
BossSideAndBaseThicknessRatio.Max=0.8

<How to Judge>
If the ratio of BossSideAndBaseThicknessRatio.Max<t/BT, it is judged as FAIL.

3. How to Analyze Check Result in Inspector / Model Viewer (Overview)

Inspection result can be confirmed in detail for each target boss in the property, highlight display as well as section view, etc.

View operation command	Description
Section View: Side Thickness (t)	Side to base thickness ratio result and formula are displayed in section view

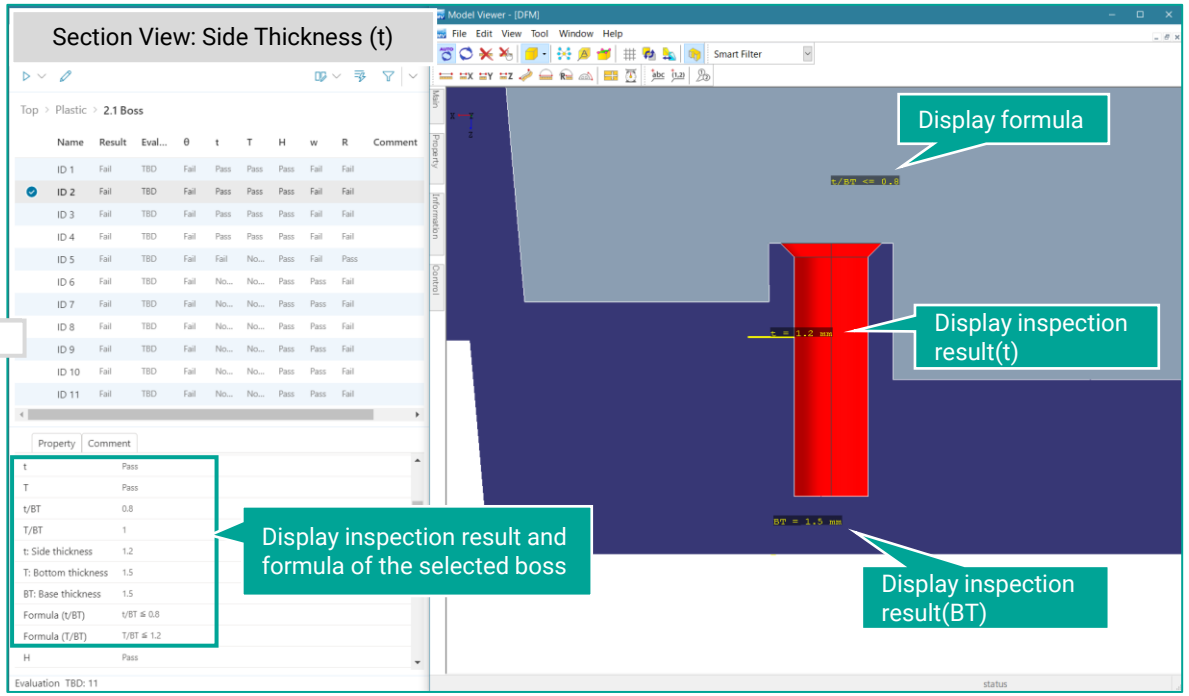

NOTE) Side thickness (t) detects the maximum wall thickness including ribs around the boss

© 2022 Elysium – Confidential & Proprietary

2.3 Boss: Bottom to base thickness ratio

Description of Check Criterion & Possible Molding Defects

<Summary>

Detect areas where the ratio of the base thickness at the bottom of the boss is greater than the judged value.

Molding Defects

If the bottom thickness (T) is greater than threshold for the base thickness (BT), molding defects such as sink marks, voids, etc. might occur.

1. How to Check & Prerequisites

<How to Check>

Verify the ratio of the bottom thickness (T) to the base thickness (BT) is below threshold value.

<Prerequisites>

Geometry recognition is completed on 'Boss'.

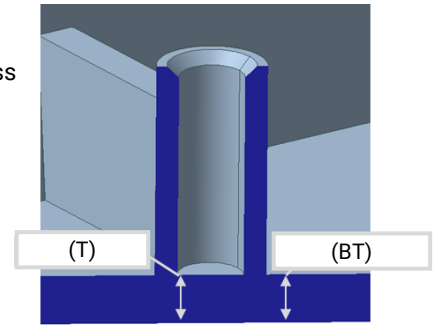

2. How to Judge & Default Value

<Default Value>

Boss | Max. bottom to base thickness ratio tol
BossBottomAndBaseThicknessRatio.Max=1.2

<How to Judge>

If the ratio of BossBottomAndBaseThicknessRatio.Max<T/BT, it is judged as FAIL.

3. How to Analyze Check Result in Inspector / Model Viewer (Overview)

Inspection result can be confirmed in detail for each target boss in the property, highlight display as well as section view, etc.

View operation command	Description
Section View: Bottom Thickness (T)	Bottom to base thickness ratio result and formula are displayed in section view

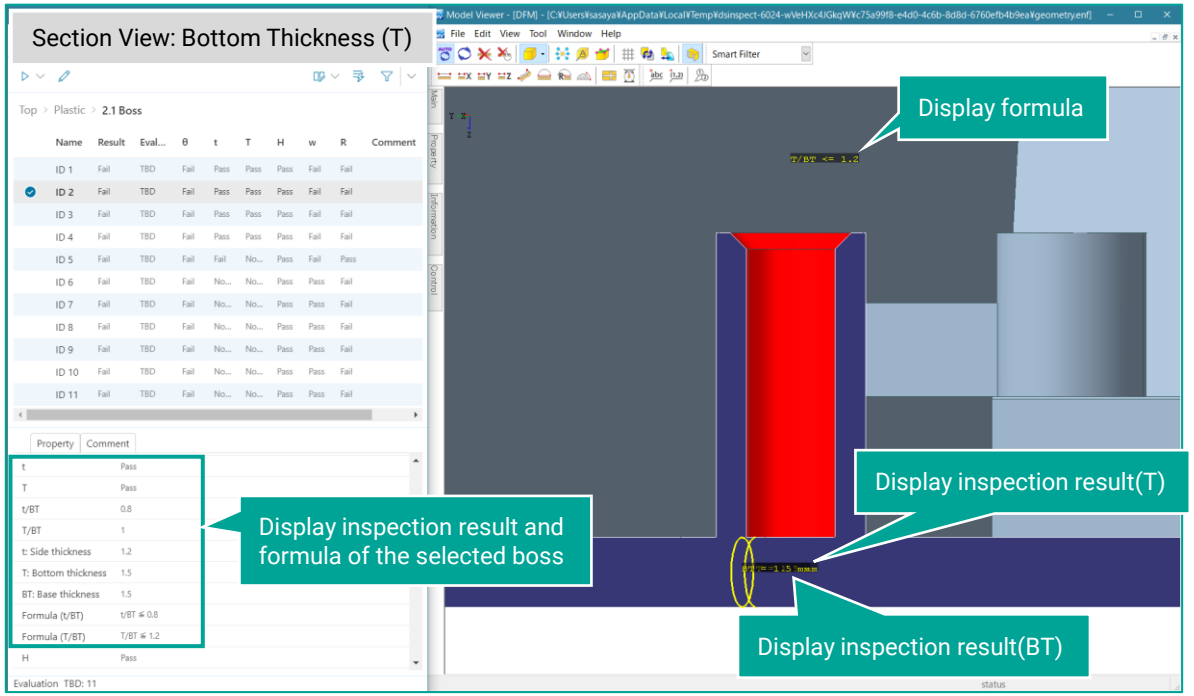

© 2022 Elysium – Confidential & Proprietary

2.4 Boss: Height to outer diameter ratio

Description of Check Criterion & Possible Molding Defects

<Summary>

Detect elongated bosses in the model.

Molding Defects

Elongated bosses where boss height (H) is greater than the boss outer diameter (D) may cause short filling. In addition, there are concerns about sticking and/or mold deposit occurring when the mold is removed.

1. How to Check & Prerequisites

<How to Check>

Verify the ratio of the boss height (H) to the outer diameter (D) is below the upper threshold.

<Prerequisites>

Geometry recognition is completed on 'Boss'.

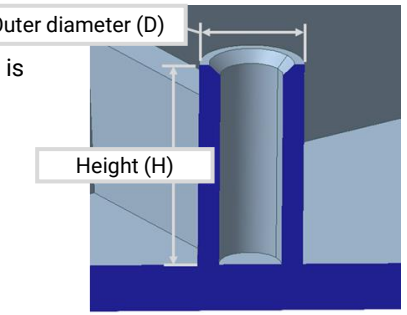

2. How to Judge & Default Value

<Default Value>

Boss height to outer diameter ratio | Max. ratio tol
BossHeightDiamRatio.Max=3

<How to Judge>

If the ratio of H/D>BossHeightDiamRatio.Max , it is judged as FAIL.

3. How to Analyze Check Result in Inspector / Model Viewer (Overview)

Inspection result can be confirmed in detail for each target boss in the property, highlight display as well as section view, etc.

View operation command	Description
Section View: Height (H)	Height to outer diameter ratio result and formula are displayed in section view

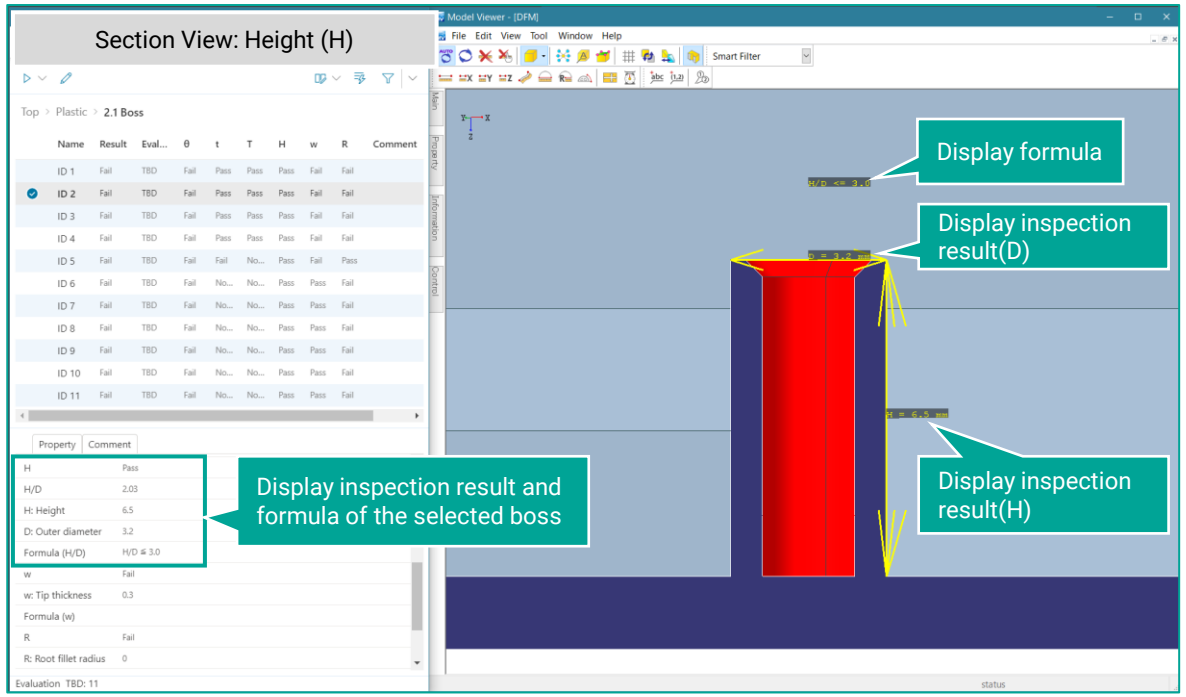

© 2022 Elysium – Confidential & Proprietary

2.5 Boss: Tip width

Description of Check Criterion & Possible Molding Defects

<Summary>

Detect bosses where the tip width is out of the threshold range.

Molding Defects

If the tip width (w) is smaller than the threshold value, it might cause short filling.

1. How to Check & Prerequisites

<How to Check>

Verify the boss tip width (w) is greater than the threshold value.

<Prerequisites>

Geometry recognition is completed on ‘Boss’.

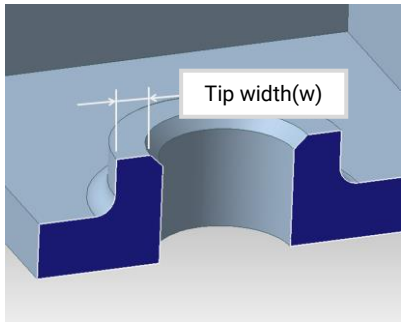

2. How to Judge & Default Value

<Default Value>
Boss tip width | Min. width tol
BossTipWidth.Min=1.0mm
<How to Judge>
If BossTipWidth.Min>w, it is judged as FAIL.

3. How to Analyze Check Result in Inspector / Model Viewer (Overview)

Inspection result can be confirmed in detail for each target boss in the property, highlight display as well as section view, etc.

View operation command	Description
Section View: Tip Width (w)	Tip width and formula are displayed in section view

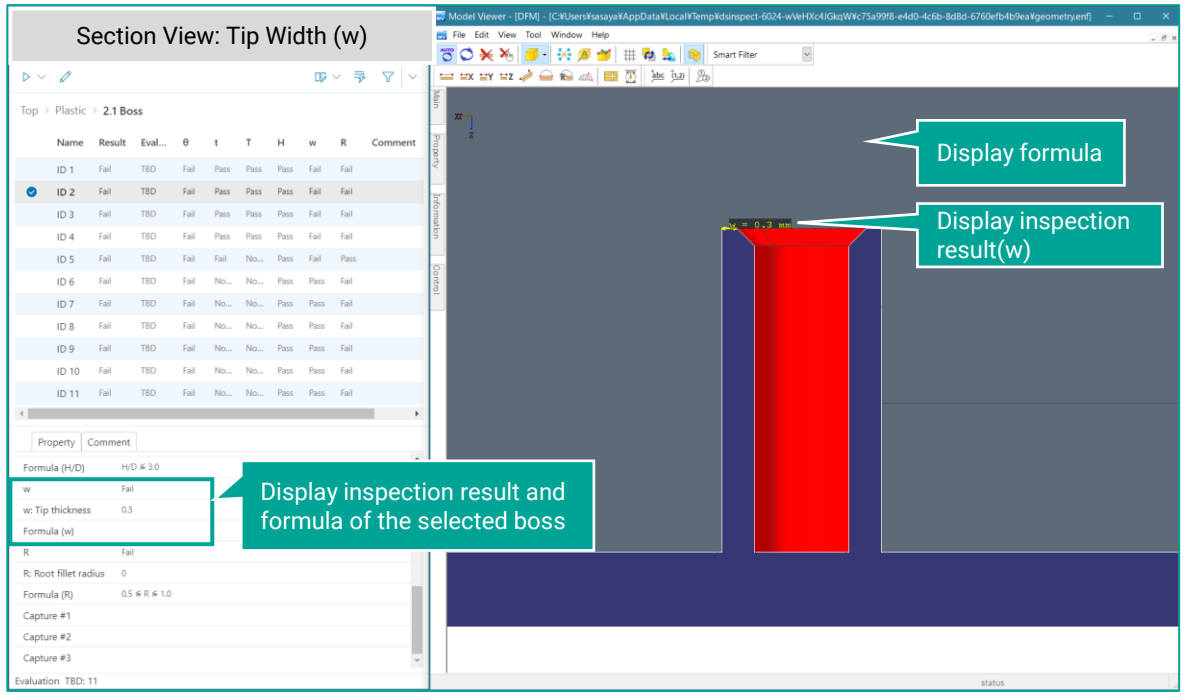

© 2022 Elysium – Confidential & Proprietary

2.6 Boss: Root fillet radius

Description of Check Criterion & Possible Molding Defects

<Summary>

Detect bosses where the root fillet radius of the boss is outside the threshold.

Molding Defects

If the root fillet radius is larger than the threshold molding defects such as sink marks, voids, etc. might occur.

1. How to Check & Prerequisites

<How to Check>

Verify the boss root fillet radius (R) is within the threshold or not.

<Prerequisites>

Geometry recognition is completed on 'Boss' and 'Fillet'.

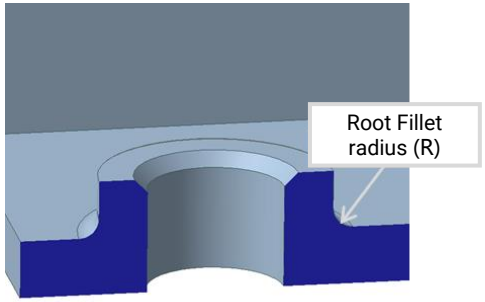

2. How to Judge & Default Value

<Default Value>
Boss | Max. root fillet radius tol BossRootFilletSize.Max=1.0 mm
Boss | Min. root fillet radius tol BossRootFilletSize.Min=0.5 mm
<How to Judge>
If R<BossRootFilletSize.Min or BossRootFilletSize.Max<R, it is judged as FAIL.

3. How to Analyze Check Result in Inspector / Model Viewer (Overview)

Inspection result can be confirmed in detail for each target boss in the property, highlight display as well as section view, etc.

View operation command	Description
Section View: Root Fillet Radius (R)	Root fillet radius result and formula are displayed in section view

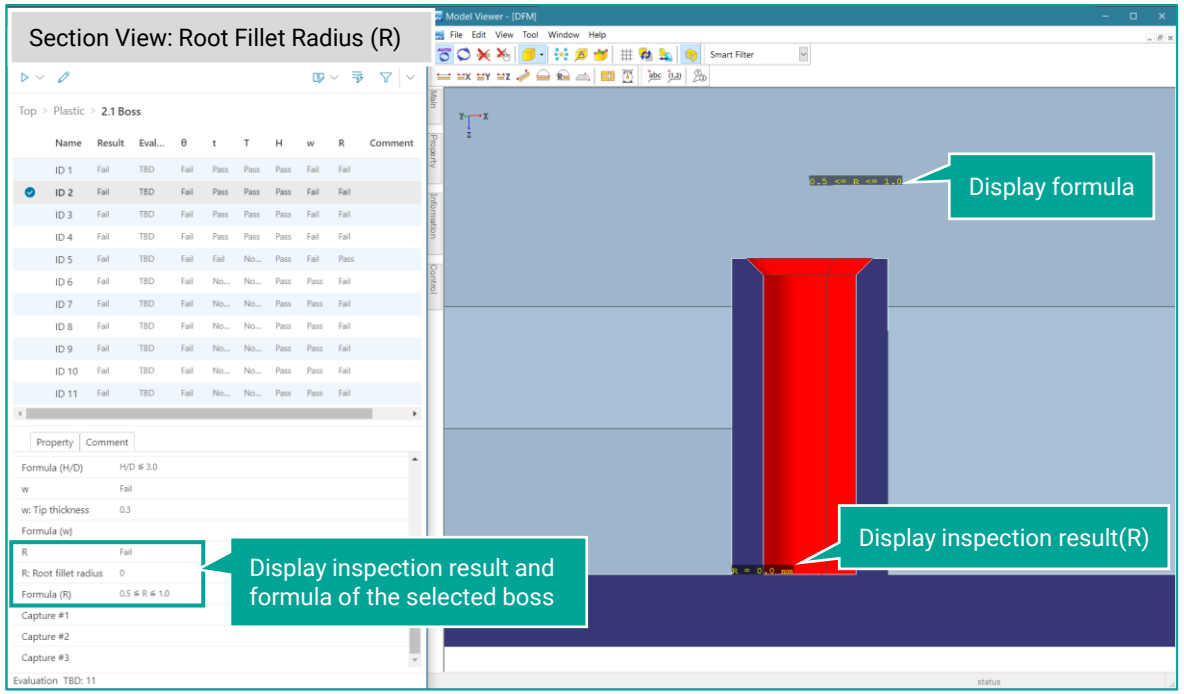

© 2022 Elysium – Confidential & Proprietary

2.7 Boss: Other Parameters Related to Boss

Toggle True/False for each inspection item related to boss

Inspection items can be switched to true/false to either inspect or skip.

true: Run inspection

false: Skip inspection

Please fill in the value in lowercase only.

Parameter Name	Initial Value	Details
Boss | Whether to check draft angle CheckDraftAngle.Flag	true	<2.1 Boss: Draft angle> Calculate the draft angle of each boss and detect bosses below the threshold value
Boss | Whether to check side thickness by ratio to base thickness CheckSideThickness.Flag	true	<2.2 Boss: Side to base thickness ratio> Detect where the root thickness of the boss is greater the threshold value
Boss | Whether to check bottom thickness by ratio to base thickness CheckBottomThickness.Flag	true	<2.3 Boss: Bottom to base thickness ratio> Detect where the ratio of the base thickness at the bottom of the boss is greater the threshold value
Boss | Whether to check height by ratio to outer diameter CheckHeight.Flag	true	<2.4 Boss: Height to outer diameter ratio> Detect elongated bosses in the model
Boss | Whether to check tip width CheckTipWidth.Flag	true	<2.5 Boss: Tip width> Detect bosses whose tip width is outside of the threshold value
Boss | Whether to check root fillet radius CheckRootR.Flag	true	<2.6 Boss: Root fillet radius> Detect bosses where the root fillet radius of the boss is outside the threshold value

© 2022 Elysium – Confidential & Proprietary

Rib

© 2022 Elysium – Confidential & Proprietary

ELYSIUM

Inspection item: 3. Rib

Description of Check Criterion & Possible Molding Defects

<Summary>

Able to confirm the results such as rib height, thickness ratio, and draft angle in a list.

Molding defects

Inadequate ribs can lead to sink marks. We comprehensively inspect each ribs and from the results you can take measures to prevent molding defects in advance.

1. Inspection items

Inspection items related to rib are as follows. For details, please check the explanation page for each item.
<3.1 Rib: Draft angle>
Result is displayed in the Θ column of the item list. If the draft angle is below the threshold value, it is judged as FAIL.
<3.2 Rib: Height to base thickness ratio>
Result is displayed in the H column of the item list. If the ratio is above the threshold value, it is judged as FAIL.
<3.3 Rib: Root to base thickness ratio>
Result is displayed in the W column of the item list. If the ratio is above the threshold value, it is judged as FAIL.
<3.4 Rib: Tip width>
Result is displayed in the w column of the item list. If the tip width is below the threshold value, it is judged as FAIL.
<3.5 Rib: Height to tip width ratio>
Result is displayed in the w' column of the item list. If the ratio is above the threshold value, it is judged as FAIL.
<3.6 Rib: Root fillet radius>
Result is displayed in the R column of the item list. If the root fillet radius is out of the threshold value, it is judged as FAIL.
<3.7 Rib: Tip fillet radius>
Result is displayed in the r column of the item list. If the tip fillet radius is out of the threshold value, it is judged as FAIL.

2. Inspection results

Inspection results will be listed in Item List of Inspector and the overall result of each is listed in the result column. When you click on the left of 'Name', all target inspection results will be highlighted. If the result is FAIL for one of the six types of inspection items, the rib result will be FAIL. The rib result is marked as PASS when all the results are PASS.

View operation command	Description
Highlight Checked Area	Green: PASS results Red: FAIL results

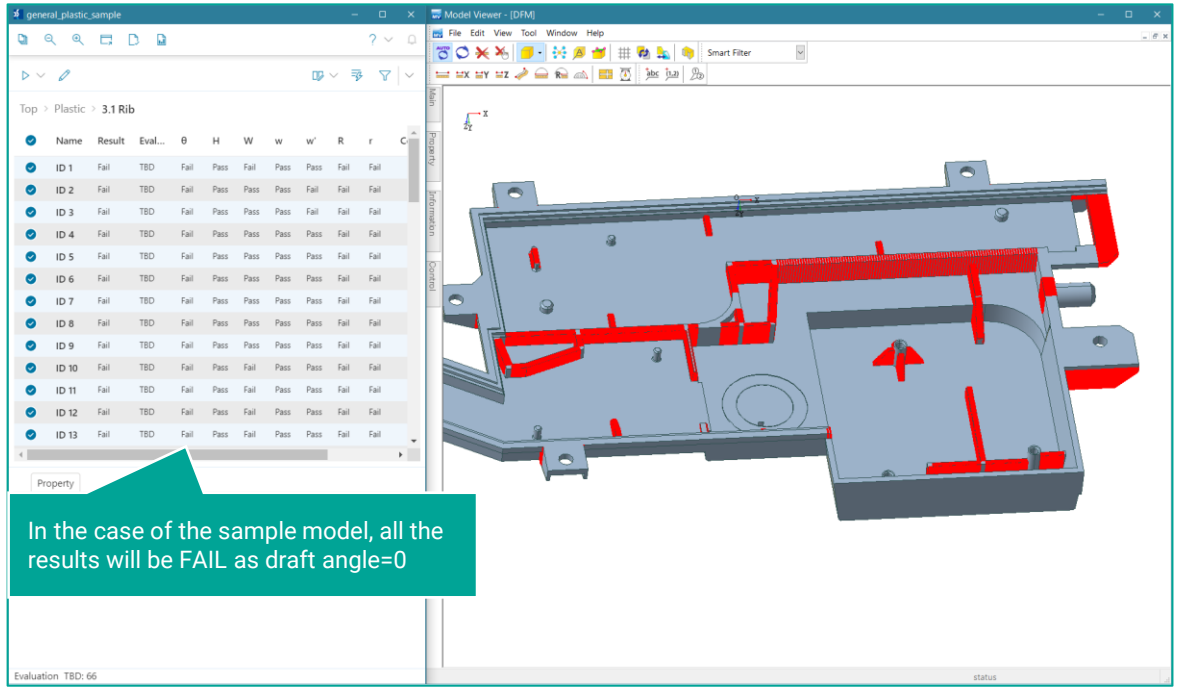

© 2022 Elysium – Confidential & Proprietary

Inspection item: 3. Rib

4. How to Analyze Check Result in Inspector / Model Viewer (Details)

Click a checked area in Item List of Inspector to show the check result in Property List. Also, right-click a checked area in Item List, and select following view commands from the context menu to analyze the selected checked area in Model Viewer.

View operation command	Description
Highlight Checked Area	Green: PASS results Red: FAIL results
Highlight Checked Area (Without Dimension)	Hide dimensions when highlighted
Fit to Checked Area	Fit to the target checked area
Section View	Section view of the target part
Section View: Draft Angle (Θ)	Draft angle result and formula are displayed in section view
Section View: Height (H)	Height to outer diameter ratio result and formula are displayed in section view
Section View: Root Thickness (W)	Root thickness to base thickness ratio result and formula are displayed in section view
Section View: Tip Width (w)	Tip width and formula are displayed in section view
Section View: Tip Width (w')	Height to tip width ratio result and formula are displayed in section view
Section View: Root Fillet Radius (R)	Root fillet radius result and formula are displayed in section view
Section View: Tip Fillet Radius (r)	Tip fillet radius result and formula are displayed in section view
Hide Surroundings	Only faces around the target part are displayed
Section View + Hide Surroundings	Display section view with only faces around the target part
Simple View	Reset the selected View operation command
Show Selected Only	Only the selected rib is displayed in the list (filtering functionality)
Edit Property	Screen for adding evaluation and comments will be displayed

Fit to Checked Area

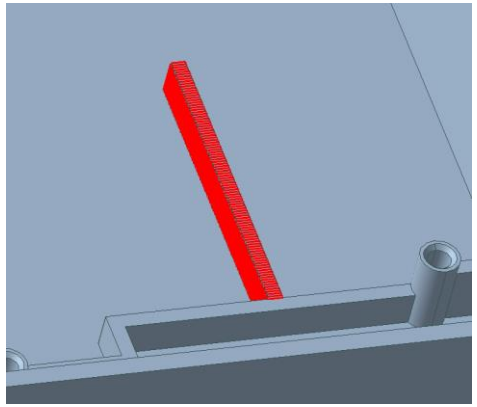

Section View

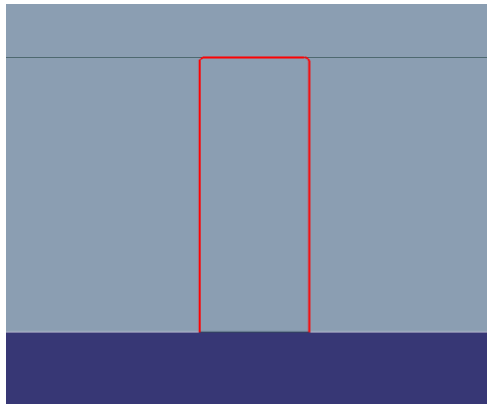

Hide Surroundings

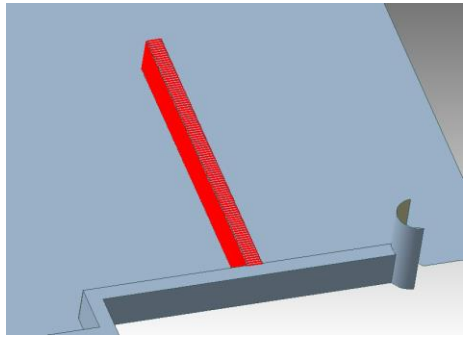

Section View + Hide Surroundings

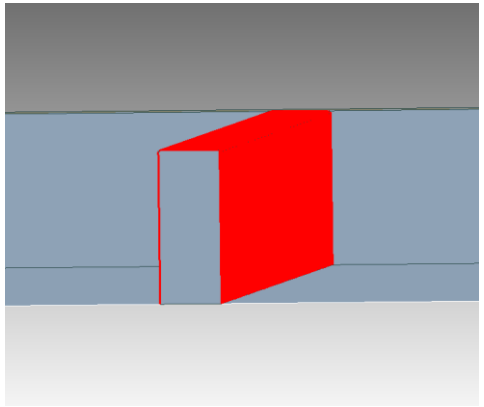

© 2022 Elysium – Confidential & Proprietary

3.1 Rib: Draft angle

Description of Check Criterion & Possible Molding Defects

<Summary>

Calculate the draft angle of each rib and detect the ribs below the threshold.

Molding Defects

Lack of draft angle will likely lead to issues when releasing mold (damage molds, etc.). DFMStudio provides a functionality to set the draft angle for each material. Please refer to section 1.3 for more details.

1. How to Check & Prerequisites

<How to Check>

Verify the rib draft angle (θ) is greater than the threshold.

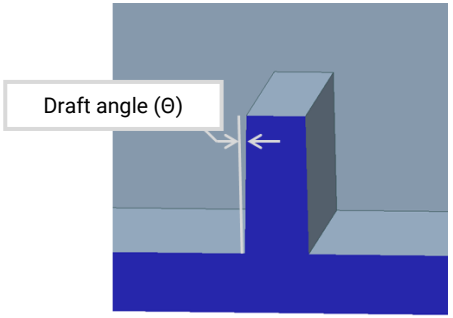

<Prerequisites>

Geometry recognition is completed on 'Rib', 'Draft direction'.

2. How to Judge & Default Value

<Default Value>
Rib draft angle | Min. angle tol
RibDraftAngle.Min=0.5°
<How to Judge>
If Θ<RibDraftAngle.Min, it is judged as FAIL.

3. How to Analyze Check Result in Inspector / Model Viewer (Overview)

Inspection result can be confirmed in detail for each target boss in the property, highlight display as well as section view, etc.

View operation command	Description
Section View: Draft Angle (Θ)	Draft angle result and formula are displayed in section view

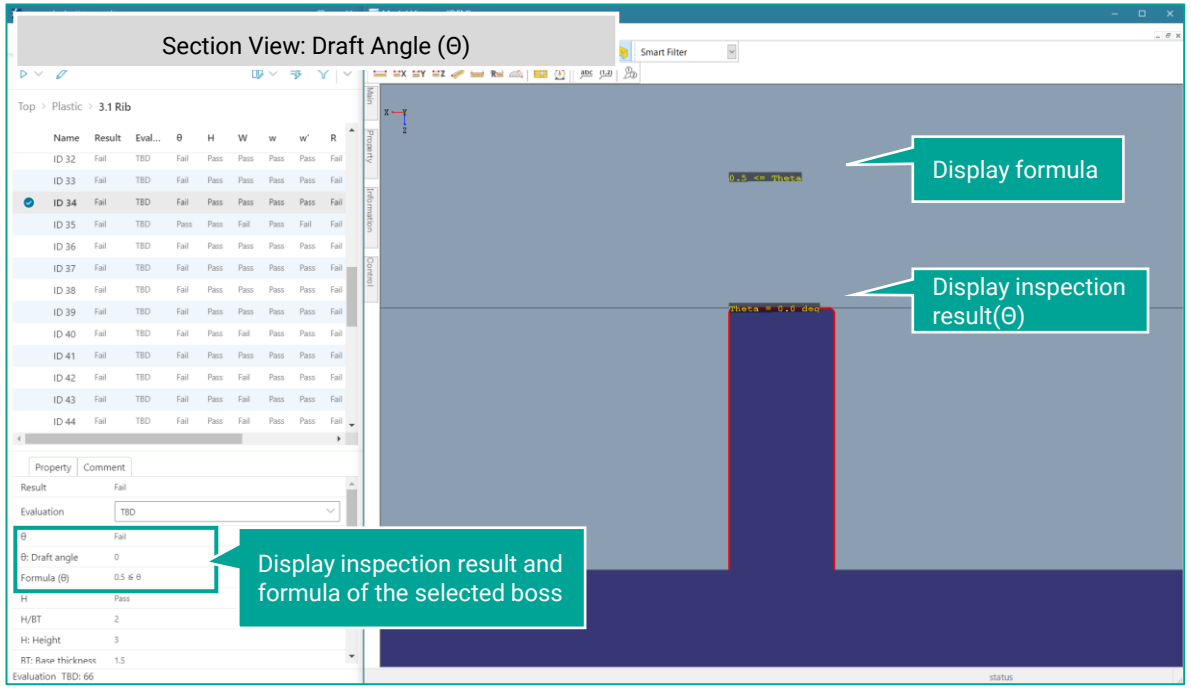

© 2022 Elysium – Confidential & Proprietary

3.2 Rib: Height to base thickness ratio

Description of Check Criterion & Possible Molding Defects

<Summary>

Detect ribs where the ratio of rib height to base thickness is greater than the threshold value.

Molding Defects

Sink marks could occur on the backside of a long rib if draft angle adds the width of the rib root. If the rib height is greater than the threshold value, consider modifying the rib height

1. How to Check & Prerequisites

<How to Check>

Verify the ratio of the rib height (H) to the base thickness (BT) is below the threshold.

<Prerequisites>

Geometry recognition is completed on 'Rib', 'Draft direction'.

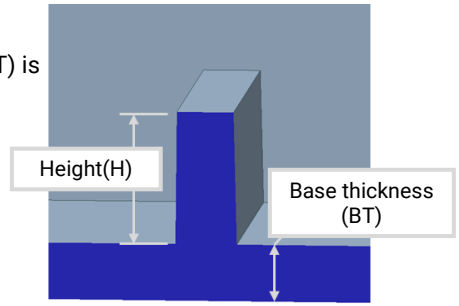

2. How to Judge & Default Value

<Default Value>
Rib | Max. height to base thickness ratio tol
RibHeightBaseThicknessRatio.Max =10.0
<How to Judge>
If the ratio of Check rib | Max. height to base thickness ratio tol<H/BT , it is judged as FAIL.

3. How to Analyze Check Result in Inspector / Model Viewer (Overview)

Inspection result can be confirmed in detail for each target boss in the property, highlight display as well as section view, etc.

View operation command	Description
Section View: Height (H)	Height to outer diameter ratio result and formula are displayed in section view

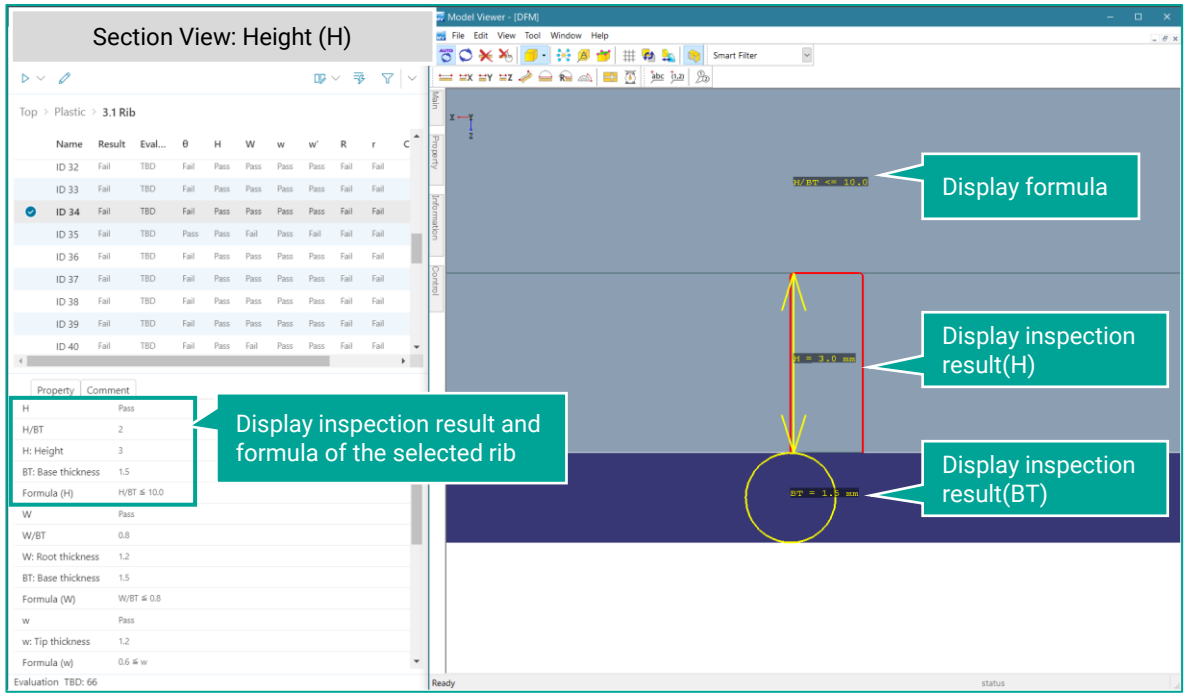

© 2022 Elysium – Confidential & Proprietary

3.3 Rib: Root to base thickness ratio

Description of Check Criterion & Possible Molding Defects

<Summary>

Detect ribs where root width is thicker than the threshold.

Molding Defects

If the root width is above the threshold value with the respect of the design thickness, it might cause molding defects (e.g., sink marks and voids).

1. How to Check & Prerequisites

<How to Check>

Verify the ratio of the rib root width (W) to the base thickness (BT) is below the upper threshold.

<Prerequisites>

Geometry recognition is completed on ‘Rib’, ‘Draft direction’.

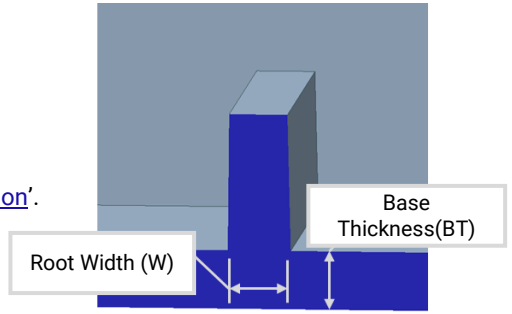

2. How to Judge & Default Value

<Default Value>
Rib | Min. root to base thickness ratio tol
RibRootWidthBaseThicknessRatio.Max=0.8
<How to Judge>
If RibRootWidthBaseThicknessRatio.Max<W/BT, it is judged as FAIL.

3. How to Analyze Check Result in Inspector / Model Viewer (Overview)

Inspection result can be confirmed in detail for each target boss in the property, highlight display as well as section view, etc.

View operation command	Description
Section View: Root Width (W)	Root thickness to base thickness ratio result and formula are displayed in section view

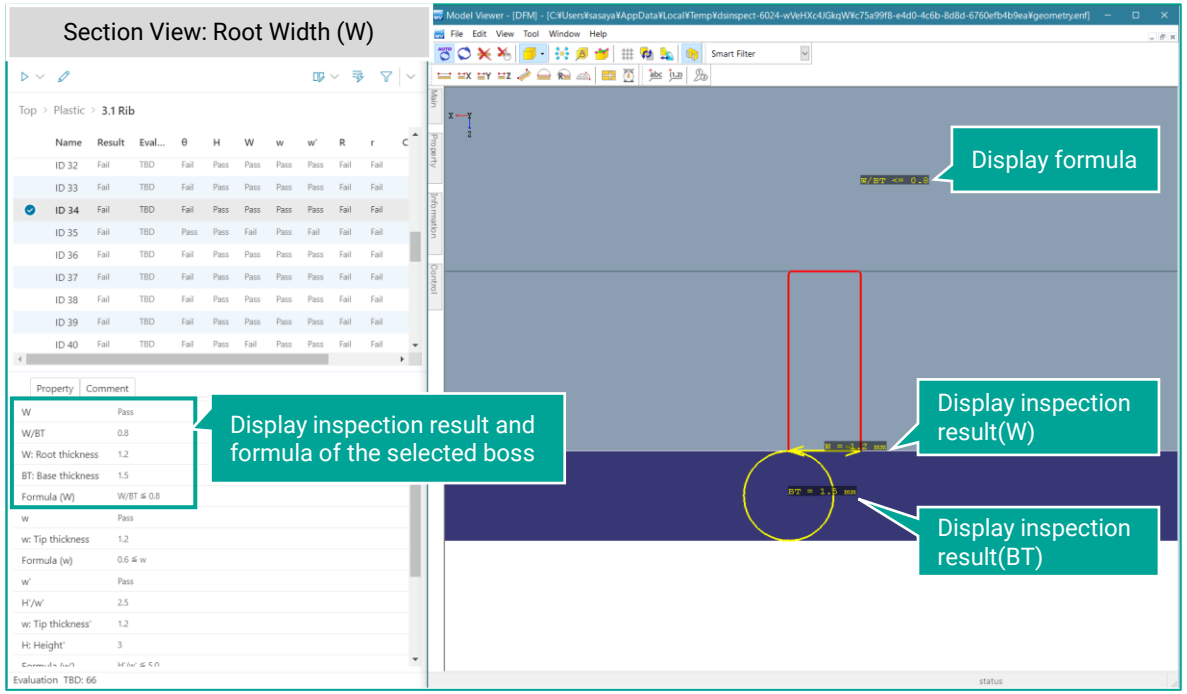

© 2022 Elysium – Confidential & Proprietary

3.4 Rib: Tip width

Description of Check Criterion & Possible Molding Defects

<Summary>

Detect ribs where the tip width is outside of the threshold value.

Molding Defects

If the tip width (w) is smaller than the threshold value, it might cause short shot.

1. How to Check & Prerequisites

<How to Check>

Verify the rib tip width (w) is greater than the threshold value.

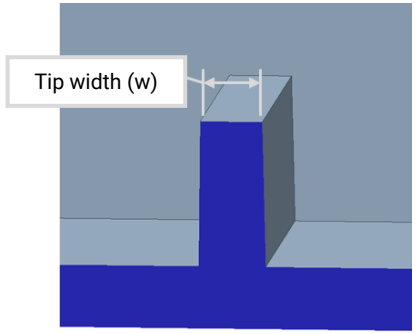

<Prerequisites>

Geometry recognition is completed on 'Rib', 'Draft direction'.

2. How to Judge & Default Value

<Default Value>
Rib | Min. tip width tol
RibSpineWidth.Min=0.6mm
<How to Judge>
If w<RibSpineWidth.Min, it is judged as FAIL.

3. How to Analyze Check Result in Inspector / Model Viewer (Overview)

Inspection result can be confirmed in detail for each target boss in the property, highlight display as well as section view, etc.

View operation command	Description
Section View: Tip Width (w)	Tip width and formula are displayed in section view

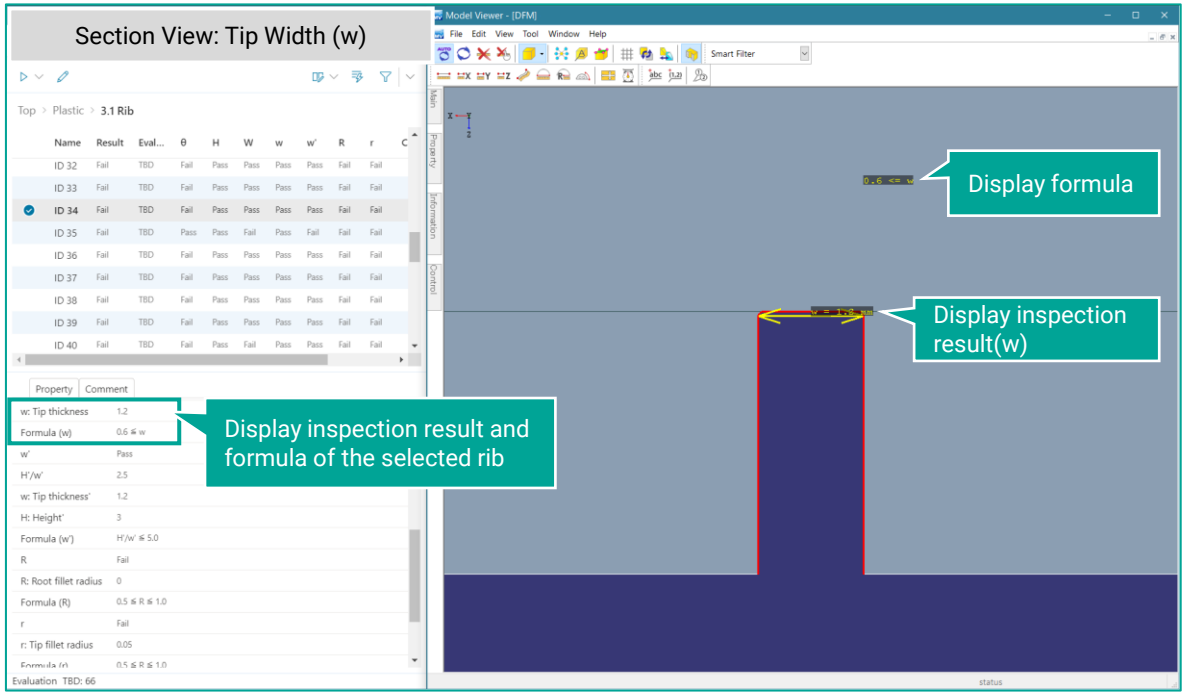

© 2022 Elysium – Confidential & Proprietary

3.5 Rib: Height to tip width ratio

Description of Check Criterion & Possible Molding Defects

<Summary>

Detect ribs where the ratio of rib height to tip width is greater than the threshold value.

Molding Defects

If the height to tip width ratio (H'/w') is greater than the threshold value, it might cause short shot.

1. How to Check & Prerequisites

<How to Check>

Verify the ratio of the rib height (H') to the tip width (w') ratio is less than the threshold value.

<Prerequisites>

Geometry recognition is completed on 'Rib', 'Draft direction'.

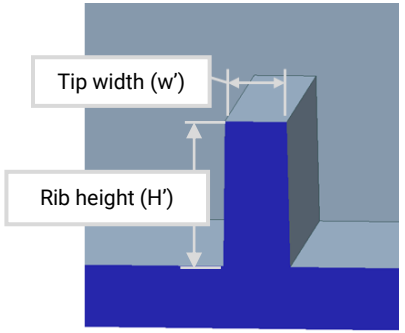

2. How to Judge & Default Value

<Default Value>

Rib | Max. height to tip width ratio tol
RibHeightSpineWidthRatio.Max=5.0

<How to Judge>

If RibHeightSpineWidthRatio.Max<H'/w', it is judged as FAIL.

3. How to Analyze Check Result in Inspector / Model Viewer (Overview)

Inspection result can be confirmed in detail for each target boss in the property, highlight display as well as section view, etc.

View operation command	Description
Section View: Tip Width (to height ratio) (w)	Height to tip width ratio result and formula are displayed in section view

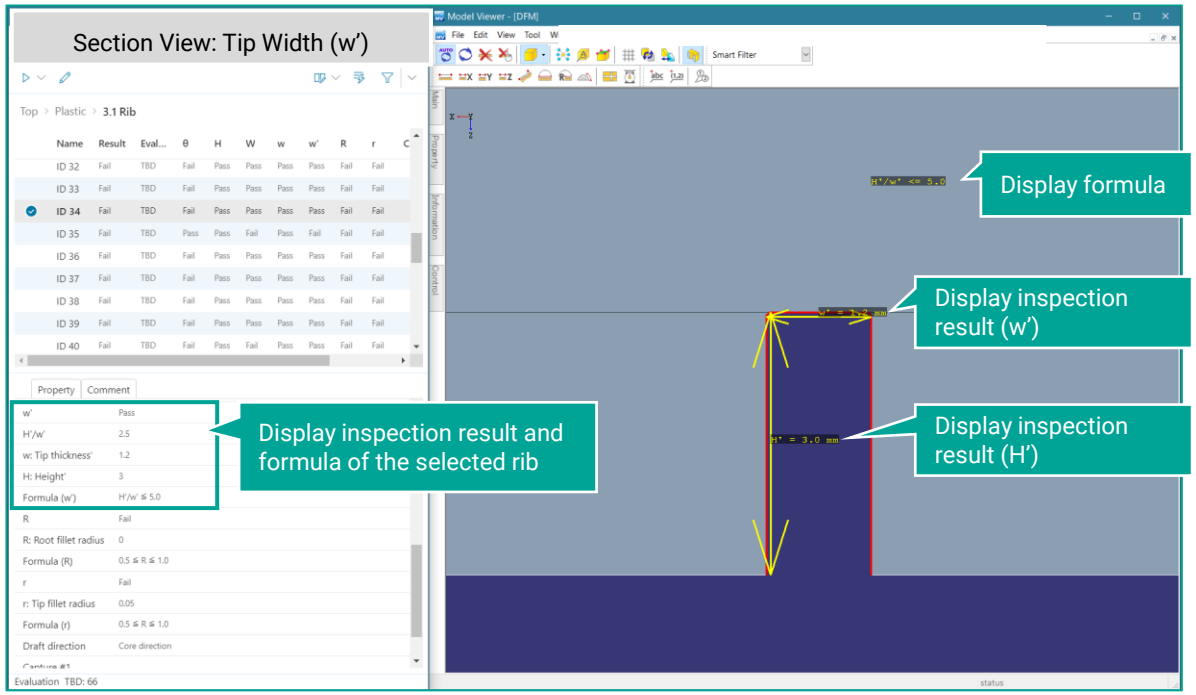

© 2022 Elysium – Confidential & Proprietary

3.6 Rib: Root fillet radius

Description of Check Criterion & Possible Molding Defects

<Summary>

Detect ribs where the root fillet radius of the boss is outside the threshold.

Molding Defects

If the root fillet radius is larger than the threshold molding defects such as sink marks, voids, etc. might occur. If it is less than the threshold, it might cause part sticking in the mold.

1. How to Check & Prerequisites

<How to Check>

Verify the rib root fillet radius (R) is within the threshold or not.

<Prerequisites>

Geometry recognition is completed on 'Rib', 'Fillet'.

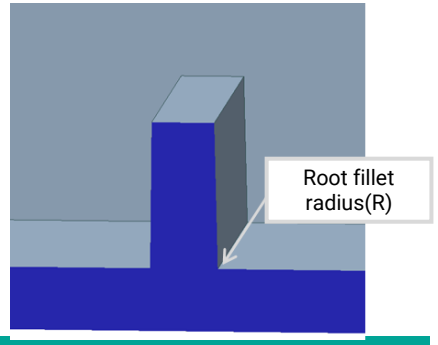

2. How to Judge & Default Value

<Default Value>
Rib | Max. root fillet radius tol RibRootFilletSize.Max=1.0 mm
Rib | Min. root fillet radius tol RibRootFilletSize.Min=0.5 mm
<How to Judge>
If R<RibRootFilletSize.Min or RibRootFilletSize.Max<R , it is judged as FAIL.

3. How to Analyze Check Result in Inspector / Model Viewer (Overview)

Inspection result can be confirmed in detail for each target boss in the property, highlight display as well as section view, etc.

View operation command	Description
Section View: Root Fillet Radius (R)	Root fillet radius result and formula are displayed in section view

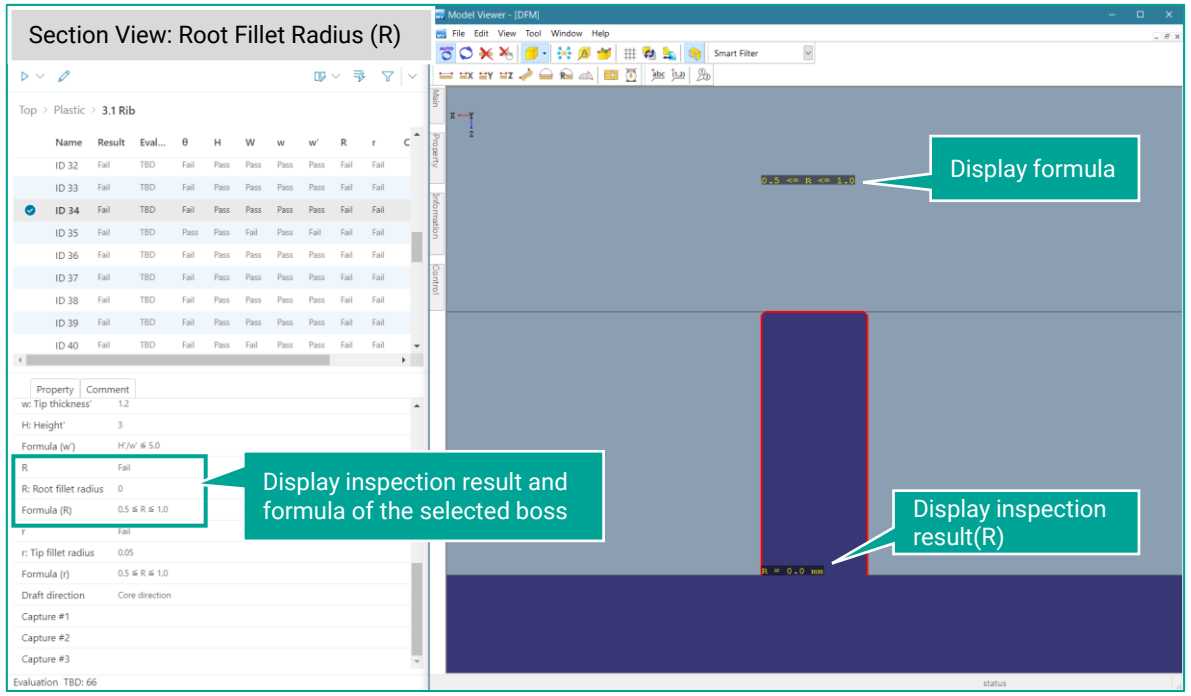

© 2022 Elysium – Confidential & Proprietary

3.7 Rib: Tip fillet radius

Description of Check Criterion & Possible Molding Defects

<Summary>

Detect ribs where the tip fillet radius of the boss is outside the threshold.

Molding Defects

If the tip fillet radius is less than the threshold, it might cause part sticking in the mold.

1. How to Check & Prerequisites

<How to Check>

Verify the rib tip fillet radius(r) is within the threshold or not.

<Prerequisites>

Geometry recognition is completed on 'Rib', 'Fillet'.

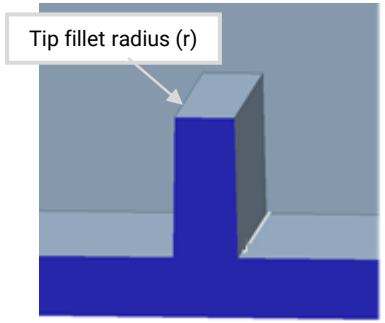

2. How to Judge & Default Value

<Default Value>

Rib | Max. tip fillet radius tol RibTipFilletSize.Max=1.0 mm
Rib | Min. tip fillet radius tol RibTipFilletSize.Min=0.5 mm

<How to Judge>

If r<RibRootFilletSize.Min or RibRootFilletSize.Max<r, it is judged as FAIL.

3. How to Analyze Check Result in Inspector / Model Viewer (Overview)

Inspection result can be confirmed in detail for each target boss in the property, highlight display as well as section view, etc.

View operation command	Description
Section View: Tip Fillet Radius (r)	Tip fillet radius result and formula are displayed in section view

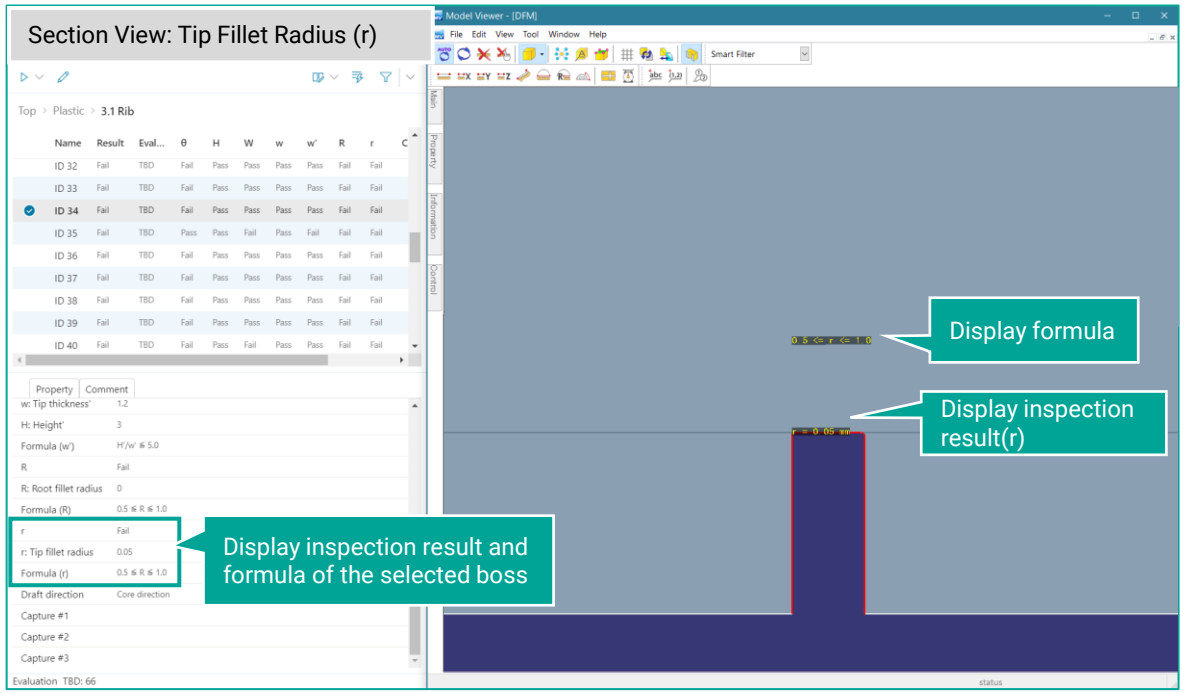

© 2022 Elysium – Confidential & Proprietary

3.8 Rib: Other parameters related to rib

Toggle True/False for each inspection item related to rib

Inspection items can be switched to true/false to either inspect or skip.

true: Run inspection

false: Skip inspection

Please fill in the value in lowercase only.

Parameter Name	Initial Value	Details
Rib | Whether to check draft angle CheckDraftAngle.Flag	true	<3.1 Rib: Draft angle> Calculate the draft angle of each boss and detect bosses below the threshold value
Rib | Whether to check height by ratio to base thickness CheckHeight.Flag	true	<3.2 Rib: Height/ Base Thickness Ratio> Detect ribs where the ratio of rib height to base thickness is greater than the threshold value
Rib | Whether to check root width by ratio to base thickness CheckRootWidth.Flag	true	<3.3 Rib: Root to base thickness ratio > Detect ribs with thick rib root
Rib | Whether to check tip width CheckTipWidth.Flag	true	<3.4 Rib: Tip width> Detect bosses whose tip width is outside the threshold value
Rib | Whether to check height by ratio to tip width CheckAdditionalTipWidth.Flag	true	<3.5 Rib: Height to tip width ratio> Detect ribs where the ratio of rib height to tip width is greater than the threshold value
Rib | Whether to check root fillet radius CheckRootR.Flag	true	<3.6 Rib: Root fillet radius> Detect ribs where the root fillet radius of the boss is outside the threshold
Rib | Whether to check tip fillet radius CheckTipR.Flag	true	<3.7 Rib: Tip fillet radius> Detect ribs where the tip fillet radius of the boss is outside the threshold

© 2022 Elysium – Confidential & Proprietary

Sharp Edge

© 2022 Elysium – Confidential & Proprietary

ELYSIUM

Inspection item: 4.1 Convex sharp edge (Product)

Description of Check Criterion & Possible Molding Defects

<Summary>

Detect convex sharp edges present in the model.

Molding Defects

If sharp edges is present, it might lead to short filling. It will also increase the man-hours required for molding as well as the production cost.

1. How to Check & Prerequisites

<How to Check>

Verify the face-to-face angle (Θ) at the convex sharp edge is above the threshold value.

<Prerequisites>

Geometry recognition is completed on ‘Sharp edge’.

2. How to Judge & Default Value

<Default Value>

Convex sharp edge (Product) | Min. angle tol SharpEdgeAngle.Min=30°

<How to Judge>

If Θ<SharpEdgeAngle.Min, it is judged as FAIL.

3. How to Analyze Check Result in Inspector / Model Viewer (Overview)

Inspection results will be listed in Item List of Inspector. When you click on the left of ‘Name’, all target inspection results will be highlighted along with the dimensions displayed.

View operation command	Description
Highlight Checked Area	Red: FAIL results

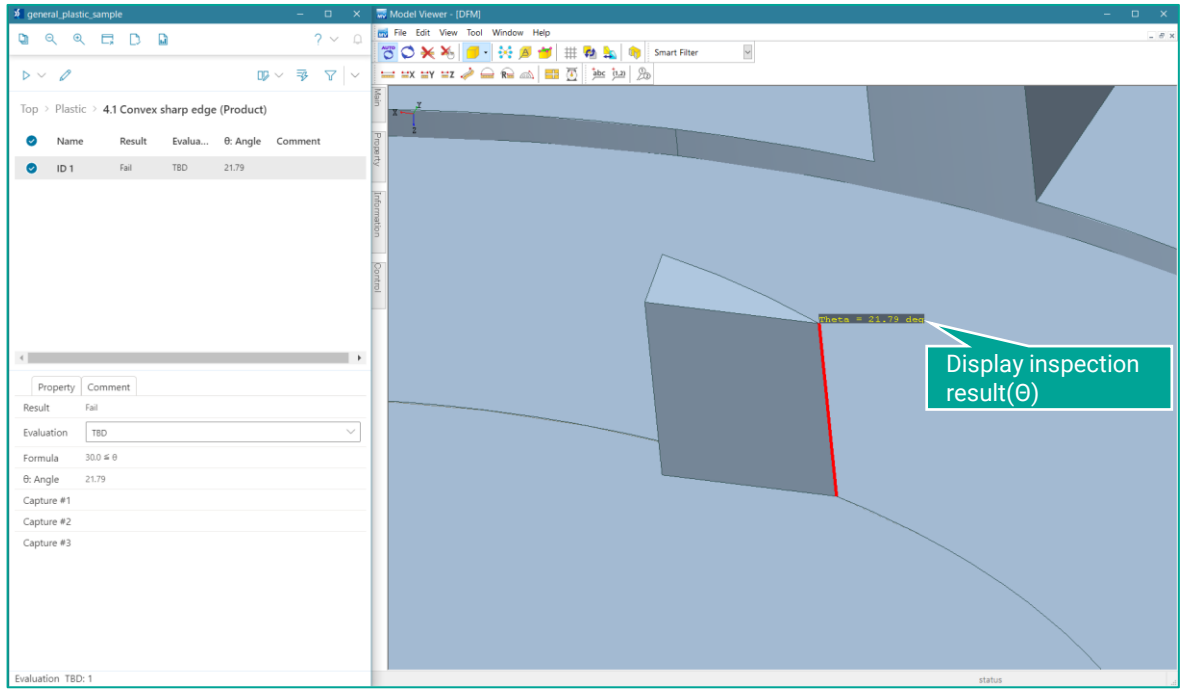

© 2022 Elysium – Confidential & Proprietary

Inspection item: 4.1 Convex sharp edge (Product)

4. How to Analyze Check Result in Inspector / Model Viewer (Details)

Click a checked area in Item List of Inspector to show the check result in Property List. Also, right-click a checked area in Item List, and select following view commands from the context menu to analyze the selected checked area in Model Viewer.

View operation command	Description
Highlight Checked Area	Red: FAIL results
Highlight Checked Area (Without Dimension)	Hide dimensions when highlighted
Fit to Checked Area	Fit to the target checked area
Section View	Section view of the target edge
Hide Surroundings	Only faces around the target part are displayed
Section View + Hide Surroundings	Display section view with only faces around the target part.
Simple View	Reset the selected View operation command
Show Selected Only	Only the selected sharp edge is displayed in the list (filtering functionality)
Edit Property	Screen for adding evaluation and comments will be displayed

Fit to Checked Area

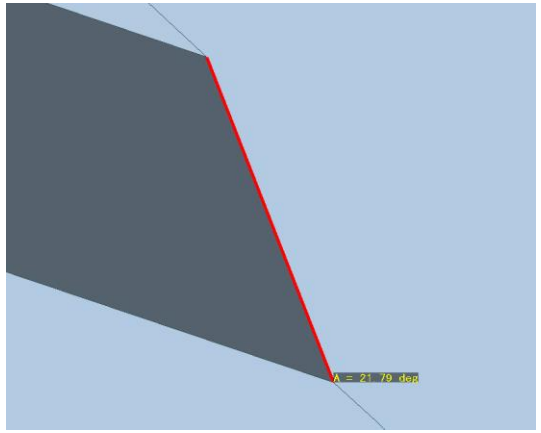

Section View

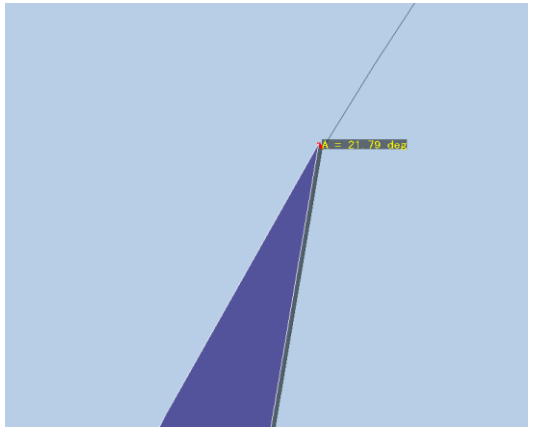

Hide Surroundings

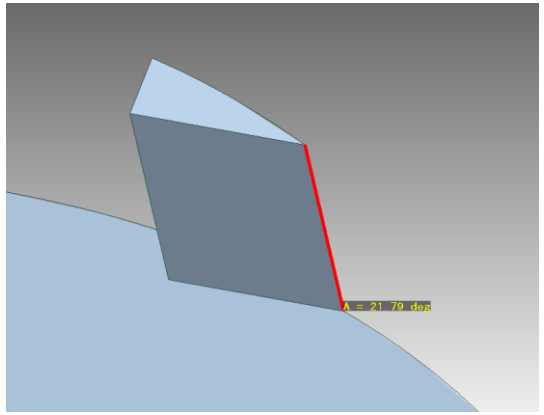

Section View + Hide Surroundings

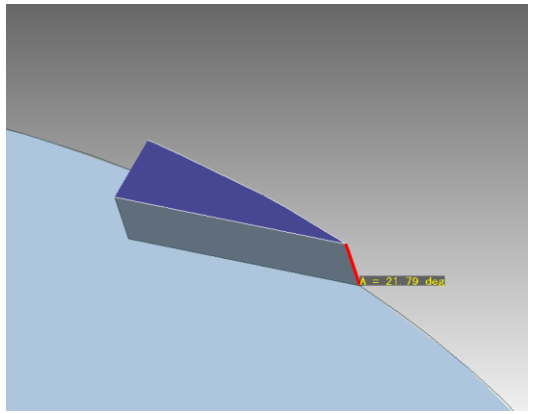

© 2022 Elysium – Confidential & Proprietary

Inspection item: 4.2 Concave sharp edge (Mold)

Description of Check Criterion & Possible Molding Defects

<Summary>

Detect concave sharp edges in the product and detect sharp edges that become convex as a mold.

Molding Defects

If concave sharp edge is present, it might lead to the mold to be damaged or deformed. In addition, if the injection pressure/filling speed is high, there might be a possibility of bent in the mold which may affect the accuracy of the molded product.

1. How to Check & Prerequisites

<How to Check>

Verify the face-to-face angle (Θ) at the concave sharp edge is above the threshold value.

<Prerequisites>

Geometry recognition is completed on 'Sharp edge'.

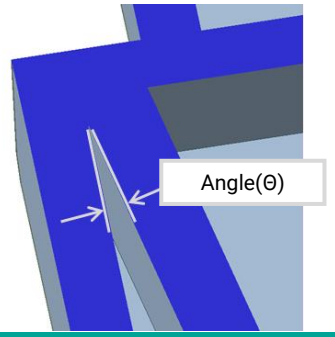

2. How to Judge & Default Value

<Default Value>
Concave sharp edge (Mold) | Min. angle tol
SharpEdgeAngle.Min=30°
<How to Judge>

If the angle(Θ)<SharpEdgeAngle.Min, it is judged as FAIL.

3. How to Analyze Check Result in Inspector / Model Viewer (Overview)

Inspection results will be listed in Item List of Inspector. When you click on the left of 'Name', all target inspection results will be highlighted along with the dimensions displayed.

View operation command	Description
Highlight Checked Area	Red: FAIL results

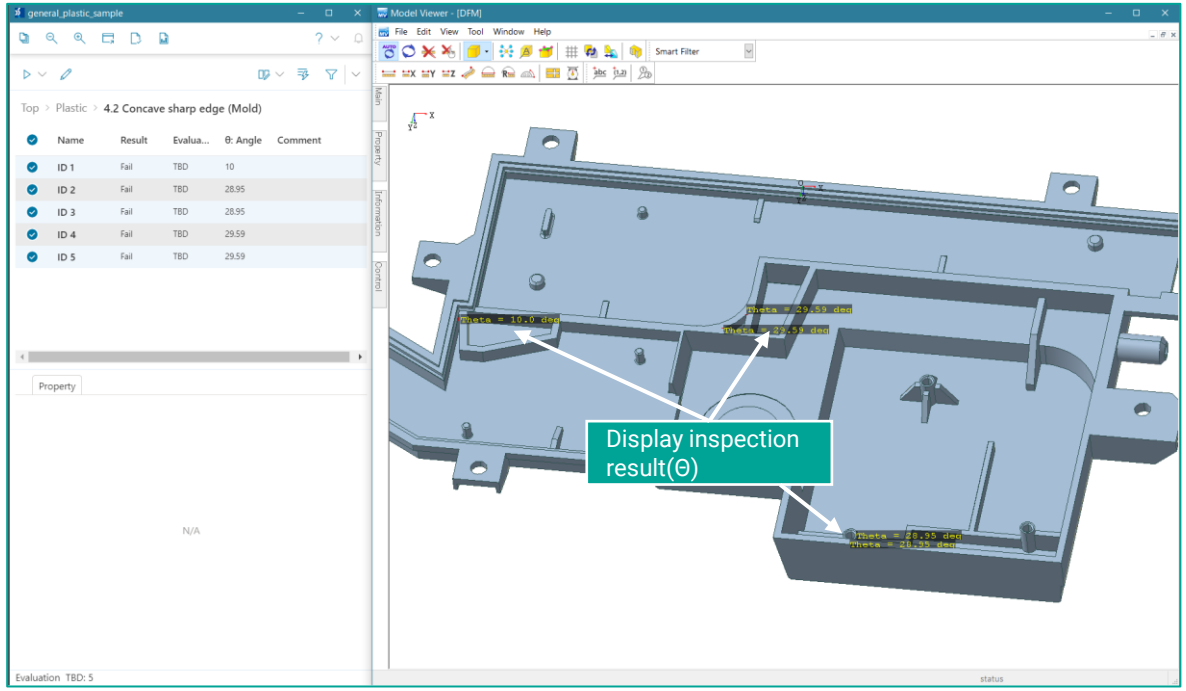

© 2022 Elysium – Confidential & Proprietary

Inspection item: 4.2 Concave sharp edge (Mold)

4. How to Analyze Check Result in Inspector / Model Viewer (Details)

Click a checked area in Item List of Inspector to show the check result in Property List. Also, right-click a checked area in Item List, and select following view commands from the context menu to analyze the selected checked area in Model Viewer.

View operation command	Description
Highlight Checked Area	Red: FAIL results
Highlight Checked Area (Without Dimension)	Hide dimensions when highlighted
Fit to Checked Area	Fit to the target checked area
Section View	Section view of the target edge
Hide Surroundings	Only faces around the target part are displayed
Section View + Hide Surroundings	Display section view with only faces around the target part.
Simple View	Reset the selected View operation command
Show Selected Only	Only the selected sharp edge is displayed in the list (filtering functionality)
Edit Property	Screen for adding evaluation and comments will be displayed

Fit to Checked Area

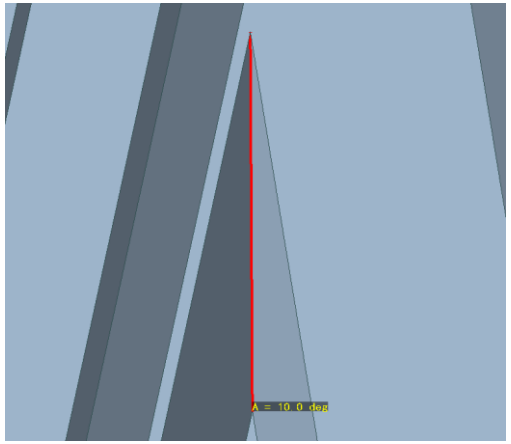

Section View

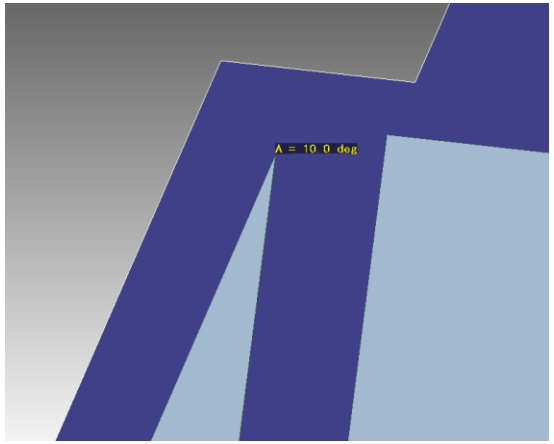

Hide Surroundings

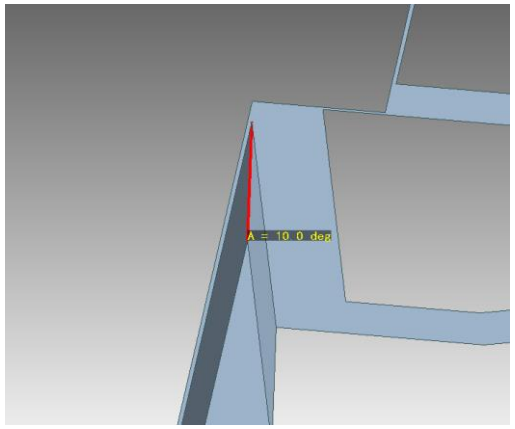

Section View + Hide Surroundings

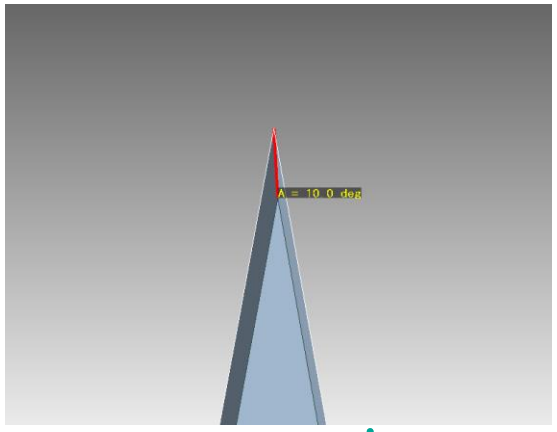

© 2022 Elysium – Confidential & Proprietary

Tiny Fillet

© 2022 Elysium – Confidential & Proprietary

ELYSIUM

Inspection item: 5.1 Tiny convex fillet (Product)

Description of Check Criterion & Possible Molding Defects

<Summary>

Detect convex fillets in the product.

Molding Defects

If tiny convex fillet is present, it might lead to short filling. It will also increase the man-hours required for molding as well as the production cost.

1. How to Check & Prerequisites

<How to Check>

Verify the minimum radius of the convex fillet is greater than the threshold value.

<Prerequisites>

Geometry recognition is completed on ‘Fillet’.

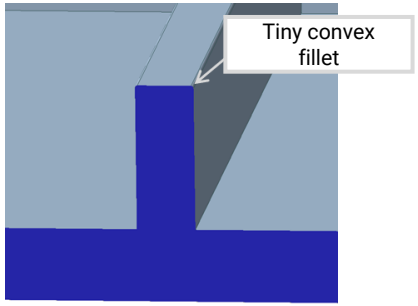

2. How to Judge & Default Value

<Default Value>
Tiny convex fillet (Product) | Min. radius tol
ProductFilletSize.Min=0.1mm

<How to Judge>

If R<ProductFilletSize.Min, it is judged as FAIL.

3. How to Analyze Check Result in Inspector / Model Viewer (Overview)

Inspection results will be listed in Item List of Inspector. When you click on the left of ‘Name’, all target inspection results will be highlighted along with the dimensions displayed.

View operation command	Description
Highlight Checked Area	Green: PASS results Red: FAIL results

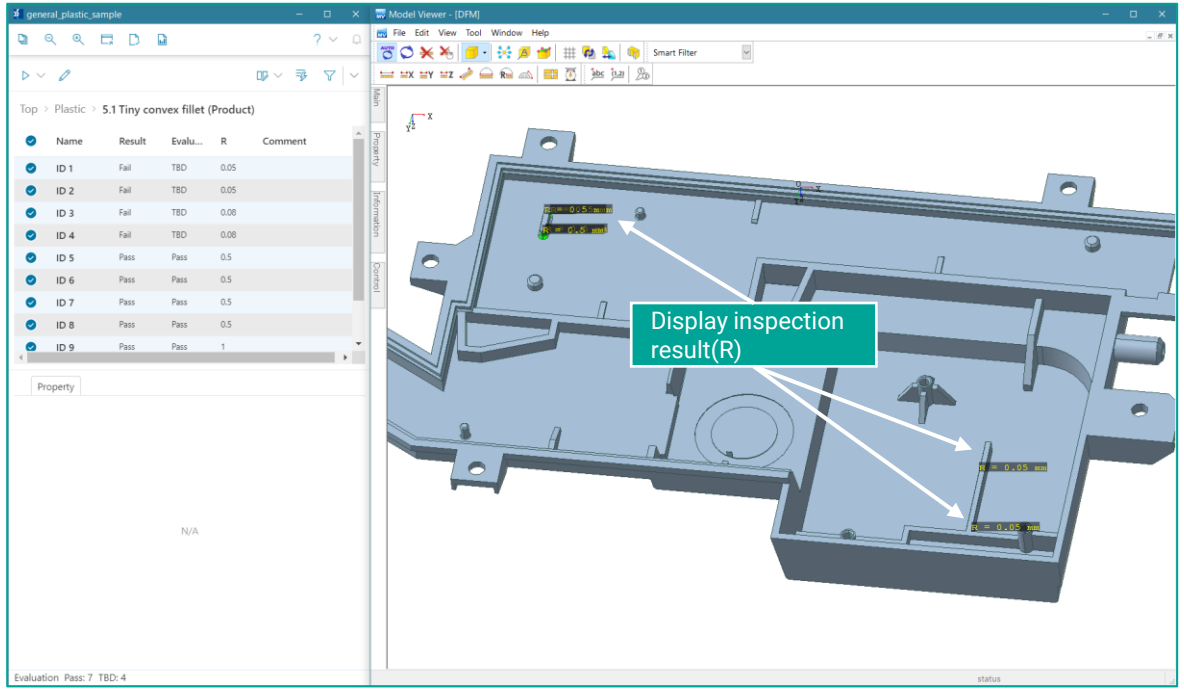

© 2022 Elysium – Confidential & Proprietary

Inspection item: 5.1 Tiny convex fillet (Product)

4. How to Analyze Check Result in Inspector / Model Viewer (Details)

Click a checked area in Item List of Inspector to show the check result in Property List. Also, right-click a checked area in Item List, and select following view commands from the context menu to analyze the selected checked area in Model Viewer.

View operation command	Description
Highlight Checked Area	Green: PASS results Red: FAIL results
Highlight Checked Area (Without Dimension)	Hide dimensions when highlighted
Fit to Checked Area	Fit to the target checked area
Section View	Section view of the target fillet
Hide Surroundings	Only faces around the target fillet are displayed only
Section View + Hide Surroundings	Display section view with only faces around the target fillet
Simple View	Reset the selected View operation command
Show Selected Only	Only the selected tiny convex fillet is displayed in the list (filtering functionality)
Edit Property	Screen for adding evaluation and comments will be displayed

Fit to Checked Area

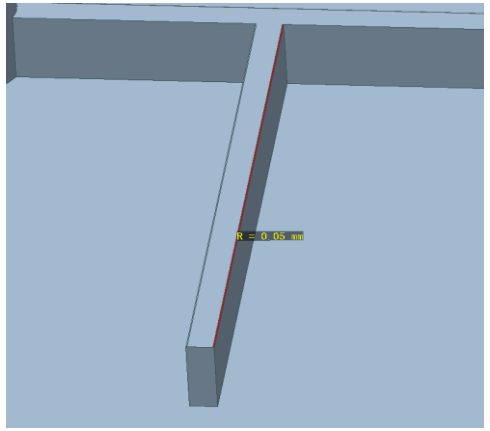

Section View

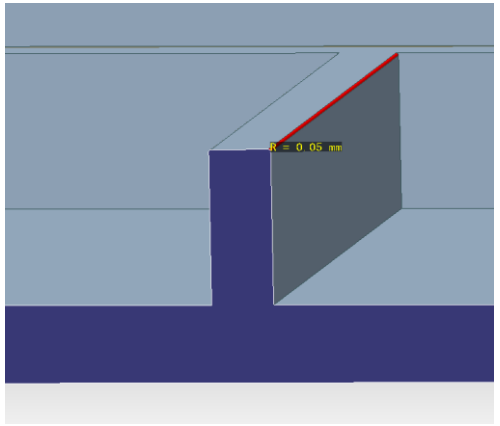

Hide Surroundings

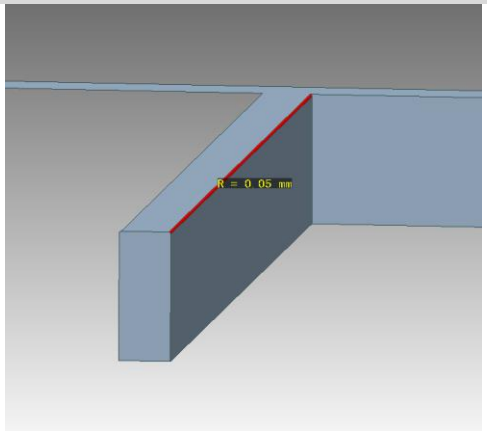

Section View + Hide Surroundings

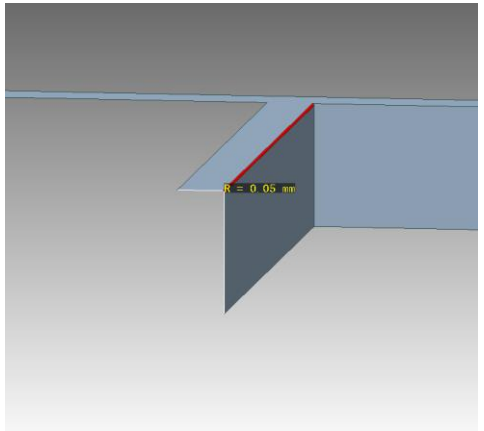

© 2022 Elysium – Confidential & Proprietary

Inspection item: 5.2 Tiny concave fillet (Mold)

Description of Check Criterion & Possible Molding Defects

<Summary>

Detect concave fillets in the product.

Molding Defects

If tiny concave fillet (mold: convex fillet) is present, it might lead to broken mold or mold deformation.

1. How to Check & Prerequisites

<How to Check>

Verify the minimum radius (R) of the concave fillet is greater than the threshold value.

<Prerequisites>

Geometry recognition is completed on ‘Fillet’.

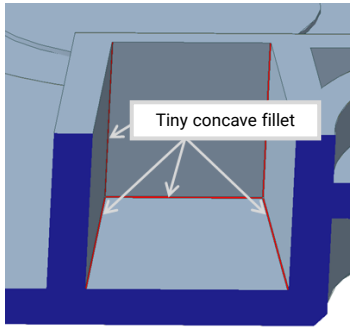

2. How to Judge & Default Value

<Default Value>

Tiny concave fillet (Mold) | Min. radius tol
DieFilletSize.Min=0.1mm

<How to Judge>

If R<DieFilletSize.Min, it is judged as FAIL.

3. How to Analyze Check Result in Inspector / Model Viewer (Overview)

Inspection results will be listed in Item List of Inspector. When you click on the left of ‘Name’, all target inspection results will be highlighted along with the dimensions displayed.

View operation command	Description
Highlight Checked Area	Green: PASS results Red: FAIL results

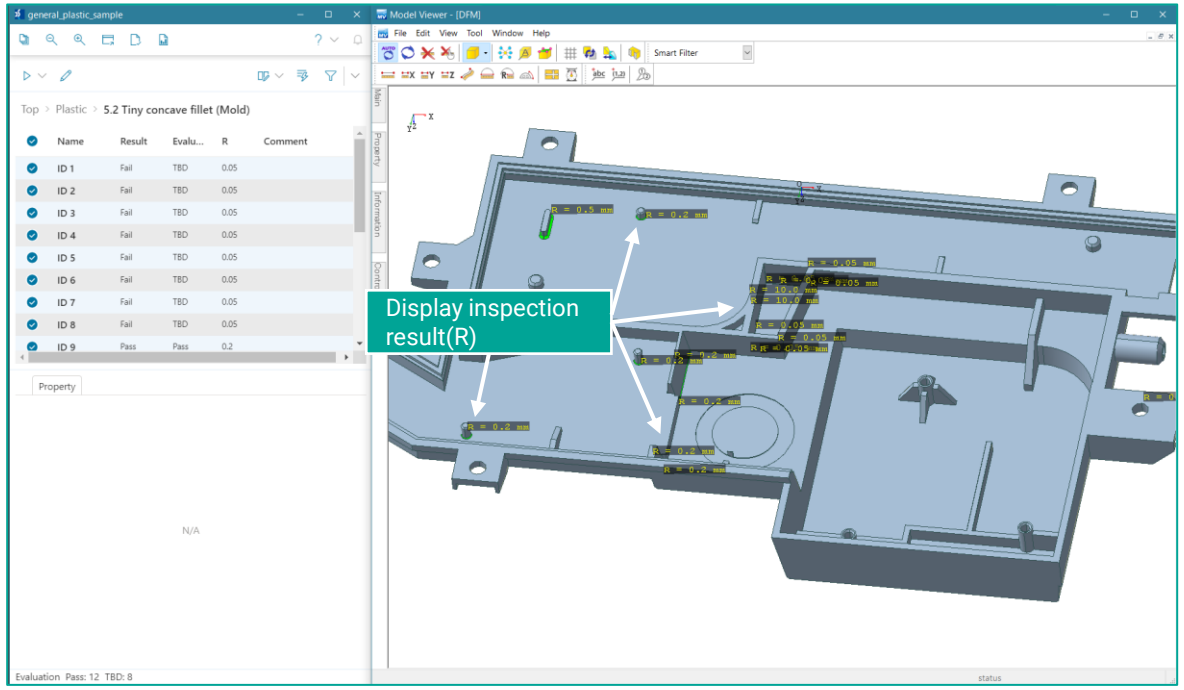

© 2022 Elysium – Confidential & Proprietary

Inspection item: 5.2 Tiny concave fillet (Mold)

4. How to Analyze Check Result in Inspector / Model Viewer (Details)

Click a checked area in Item List of Inspector to show the check result in Property List. Also, right-click a checked area in Item List, and select following view commands from the context menu to analyze the selected checked area in Model Viewer.

View operation command	Description
Highlight Checked Area	Green: PASS results Red: FAIL results
Highlight Checked Area (Without Dimension)	Hide dimensions when highlighted
Fit to Checked Area	Fit to the target checked area
Section View	Section view of the target fillet
Hide Surroundings	Only faces around the target fillet are displayed only
Section View + Hide Surroundings	Display section view with only faces around the target fillet
Simple View	Reset the selected View operation command
Show Selected Only	Only the selected tiny convex fillet is displayed in the list (filtering functionality)
Edit Property	Screen for adding evaluation and comments will be displayed

Fit to Checked Area

Section View

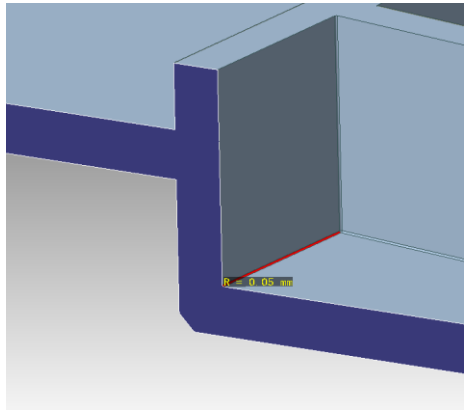

Hide Surroundings

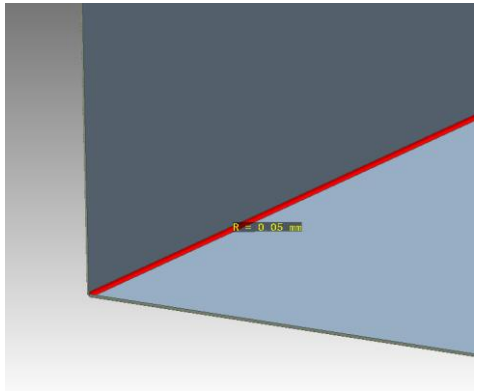

Section View + Hide Surroundings

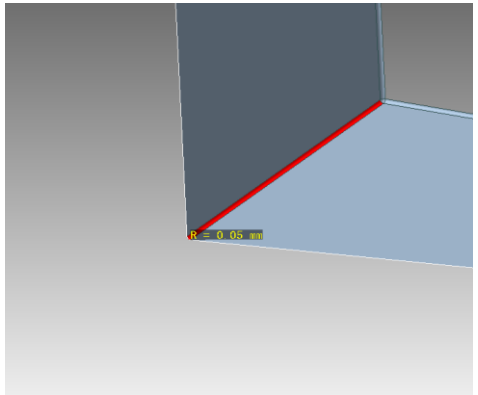

© 2022 Elysium – Confidential & Proprietary

Undercut

© 2022 Elysium – Confidential & Proprietary

ELYSIUM

Inspection item: 6.1 Undercut

Description of Check Criterion & Possible Molding Defects

<Summary>

Detect undercuts in the drafting direction.

Molding Defects

If there is undercut, it is necessary to modify on the mold to provide a slider. Complex molds are expensive and increase the production cost.

1. How to Check & Prerequisites

<How to Check>

Detect a portion that cannot be seen from all the drafting directions specified.

<Prerequisites>

Geometry recognition is completed on ‘Draft direction’.

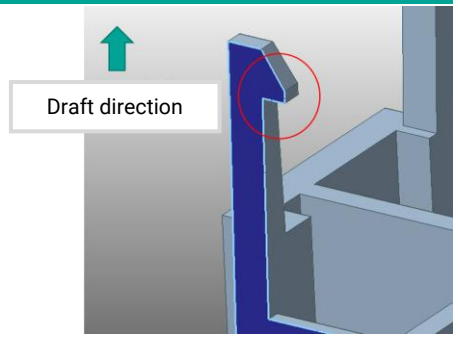

2. How to Judge & Default Value

<Default Value>

None

<How to Judge>

Detected undercuts are always judged as FAIL.

3. How to Analyze Check Result in Inspector / Model Viewer (Overview)

Inspection results will be listed in Item List of Inspector. When you click on the left of ‘Name’, all target inspection results will be highlighted along with the dimensions displayed.

View operation command	Description
Highlight Checked Area	Red: Undercut area (FAIL results)

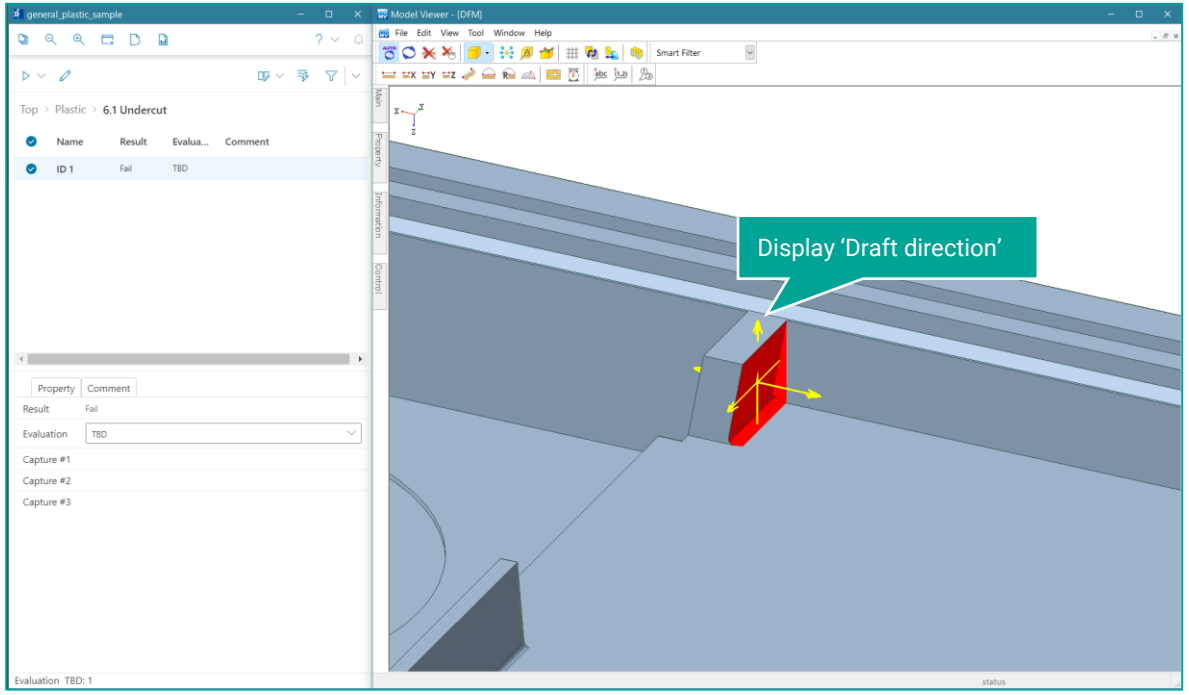

© 2022 Elysium – Confidential & Proprietary

Inspection item: 6.1 Undercut

4. How to Analyze Check Result in Inspector / Model Viewer (Details)

Click a checked area in Item List of Inspector to show the check result in Property List. Also, right-click a checked area in Item List, and select following view commands from the context menu to analyze the selected checked area in Model Viewer.

View operation command	Description
Highlight Checked Area	Red: Undercut area (FAIL results)
Highlight Checked Area (Without Dimension)	Hide dimensions when highlighted
Fit to Checked Area	Fit to the target checked area
Section View	Section view of the target undercut area
Hide Surroundings	Only faces around the target undercut area are displayed only
Section View + Hide Surroundings	Display section view with only faces around the target undercut area
Simple View	Reset the selected View operation command
Show Selected Only	Only the selected target undercut area is displayed in the list (filtering functionality)
Edit Property	Screen for adding evaluation and comments will be displayed

Fit to Checked Area

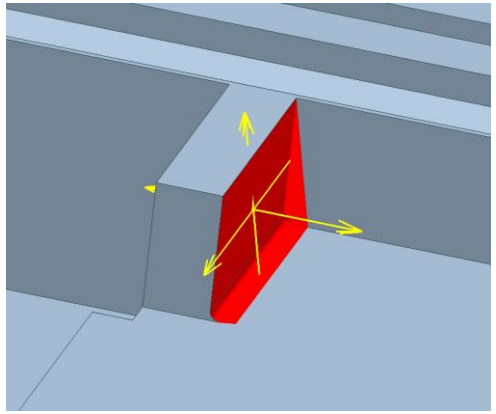

Section View

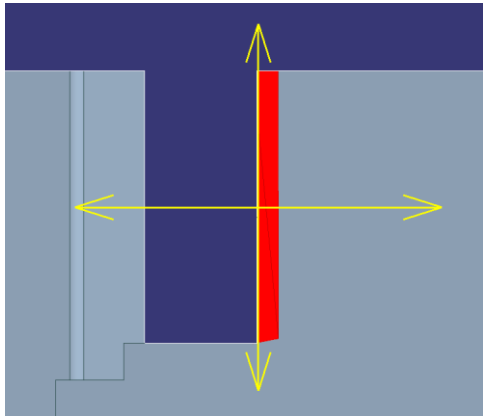

Hide Surroundings

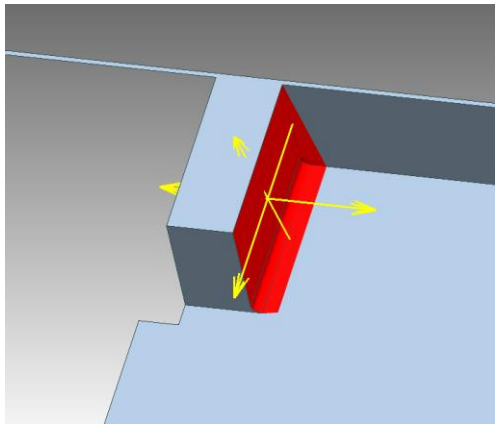

Section View + Hide Surroundings

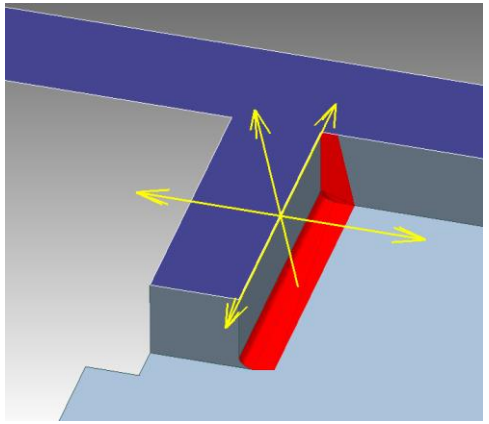

© 2022 Elysium – Confidential & Proprietary

Inspection item: 6.2 Slide stroke length

Description of Check Criterion & Possible Molding Defects

<Summary>

Detect undercut and calculate the slide stroke length of the inner side.

Molding Defects

If the stroke is not sufficient, the mold structure will be more complicated and could lead to increase in production cost.

1. How to Check & Prerequisites

<How to Check>

Detect a portion where the slide stroke is less than the threshold value specified.

<Prerequisites>

Geometry recognition is completed on ‘Draft direction’.

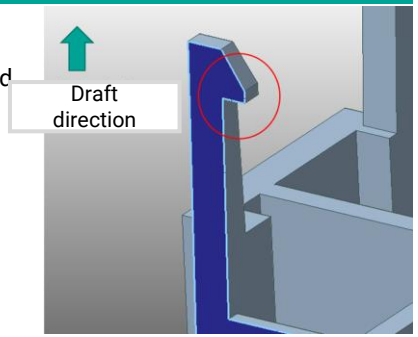

2. How to Judge & Default Value

<Default Value>

Slide stroke length | Min. length tol
SlideStrokeMargin.Min=5.0 mm
Slide stroke length | Min. length tol by ratio to undercut length
SlideStrokeRatioMin=5.0

Can set length or ratio. Whichever is more severe will be applied.

<How to Judge>

If SL: Stroke length<SlideStrokeMargin.Min + UL: Undercut length or
If SL: Stroke length<SlideStrokeMargin.Min × UL: Undercut length, it is judged as FAIL

3. How to Analyze Check Result in Inspector / Model Viewer (Overview)

Inspection results will be listed in Item List of Inspector. When you click on the left of ‘Name’, all target inspection results will be highlighted along with the dimensions displayed.

View operation command	Description
Highlight Checked Area	Red: Slide stroke length of the inner side is less than SlideStrokeMargin.Min Green: Equal or more than the SlideStrokeMargin.Min Light blue: Each area of the outer side direction

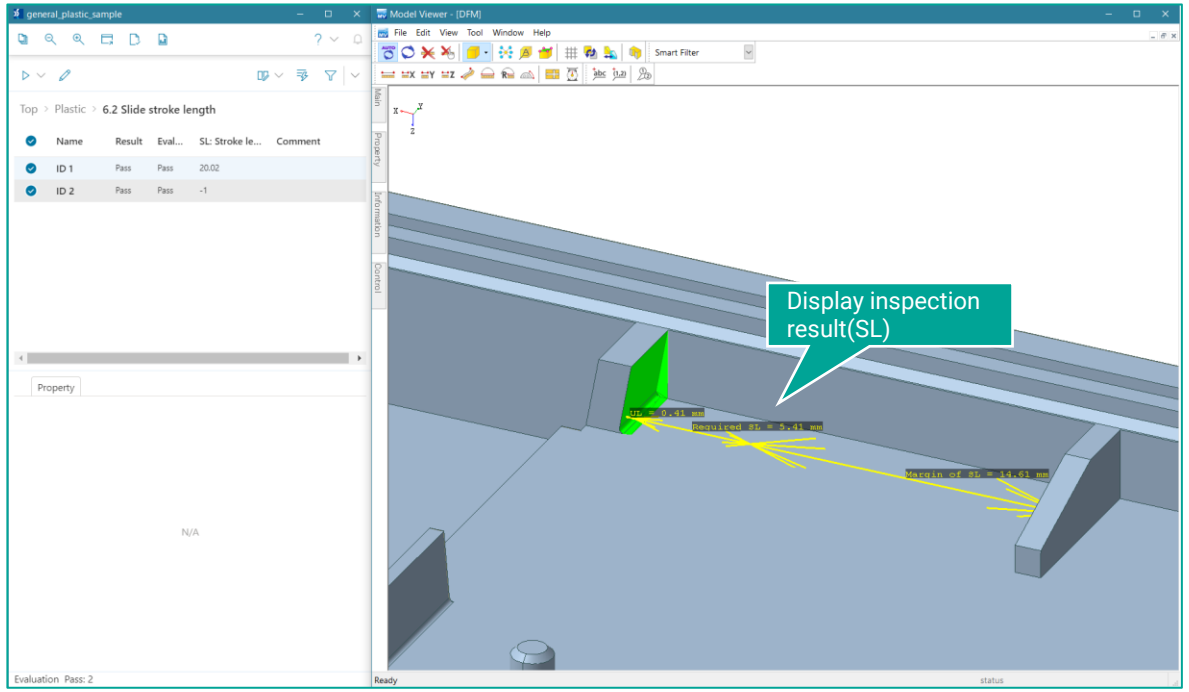

© 2022 Elysium – Confidential & Proprietary

Inspection item: 6.2 Slide stroke length

4. How to Analyze Check Result in Inspector / Model Viewer (Details)

Click a checked area in Item List of Inspector to show the check result in Property List. Also, right-click a checked area in Item List, and select following view commands from the context menu to analyze the selected checked area in Model Viewer.

View operation command	Description
Highlight Checked Area	Red: Slide stroke length of the inner side is less than SlideStrokeMargin.Min Green: Equal or more than the SlideStrokeMargin.Min Light blue: Each area of the outer slide direction
Highlight Checked Area (Without Dimension)	Hide dimensions when highlighted
Fit to Checked Area	Fit to the target checked area
Section View	Section view of the target undercut area
Hide Surroundings	Only faces around the target undercut area are displayed only
Section View + Hide Surroundings	Display section view with only faces around the target undercut area
Simple View	Reset the selected View operation command
Show Selected Only	Only the selected target undercut area is displayed in the list (filtering functionality)
Edit Property	Screen for adding evaluation and comments will be displayed

Fit to Checked Area

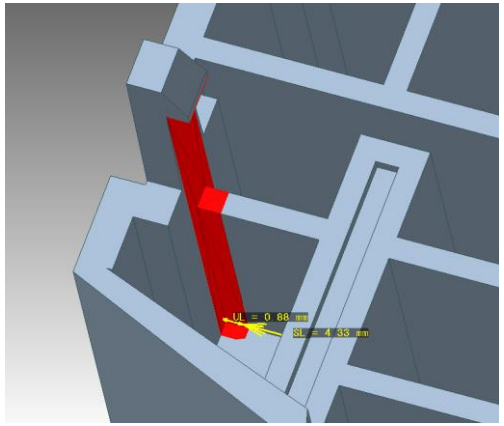

Section View

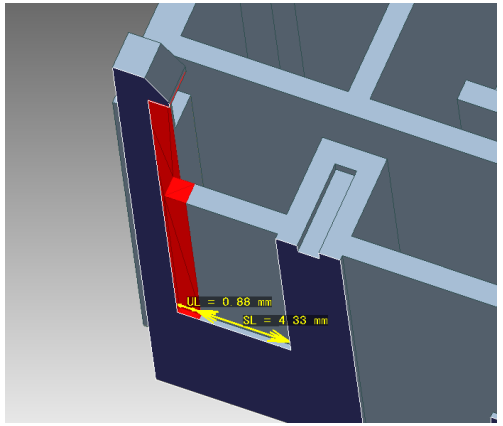

Hide Surroundings

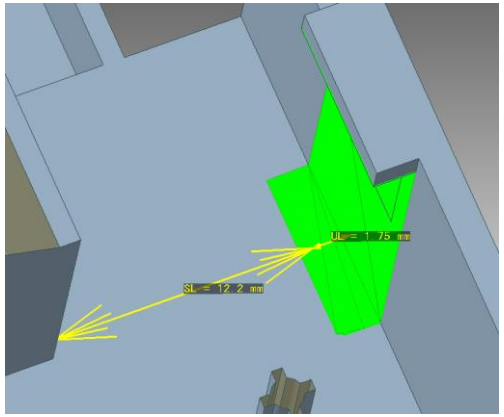

Section View + Hide Surroundings

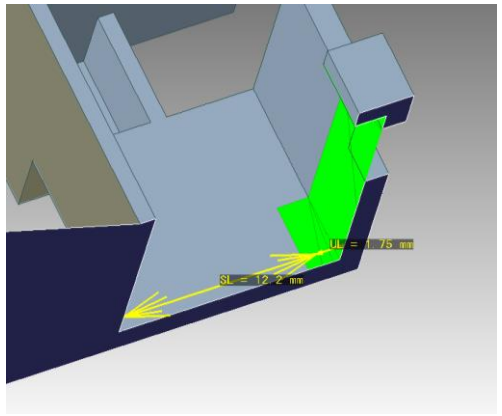

© 2022 Elysium – Confidential & Proprietary

Wall Thickness (Mod)

© 2022 Elysium – Confidential & Proprietary

ELYSIUM

Inspection item: 7.1 Thin wall (Mold)

Description of Check Criterion & Possible Molding Defects

<Summary>

Detect the portion in the product where the mold becomes thin-walled.

Molding Defects

If the mold wall thickness is thin, it might lead to broken mold or mold deformation. In addition, when the injection pressure/speed is high, the mold will likely be bent which can cause dimensional inaccuracy in the molded product.

1. How to Check & Prerequisites

<How to Check>
Detect the location where the width (w) of the area that becomes the mold thickness is thin and check the ratio of the height (h) to the width (w) of the area as seen from the draft direction is less than the threshold value.
<Prerequisites>

Geometry recognition is completed on 'Draft direction'.

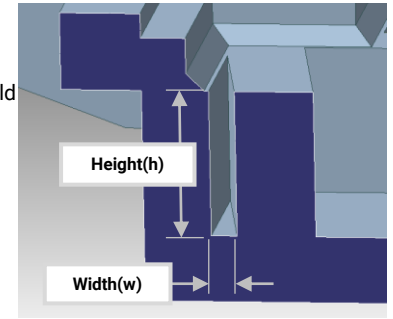

2. How to Judge & Default Value

<Default Value>	Thin wall (Mold) | Max. height to thickness ratio tol DieThicknessHeightWidthRatio.Max=2.0 Thin wall (Mold) | Target by max. thickness tol TargetDieThickness.Max=2.0
<How to Judge>	Thin wall (Mold) | Target by min. angle tol between faces DieThicknessNormalAngleDiff.Min=130 °

If DieThicknessHeightWidthRatio.Max<h/W, it is judged as FAIL

3. How to Analyze Check Result in Inspector / Model Viewer (Overview)

Inspection results will be listed in Item List of Inspector. When you click on the left of 'Name', all target inspection results will be highlighted along with the dimensions displayed.

View operation command	Description
Highlight Checked Area	Blue: Thin wall (mold)

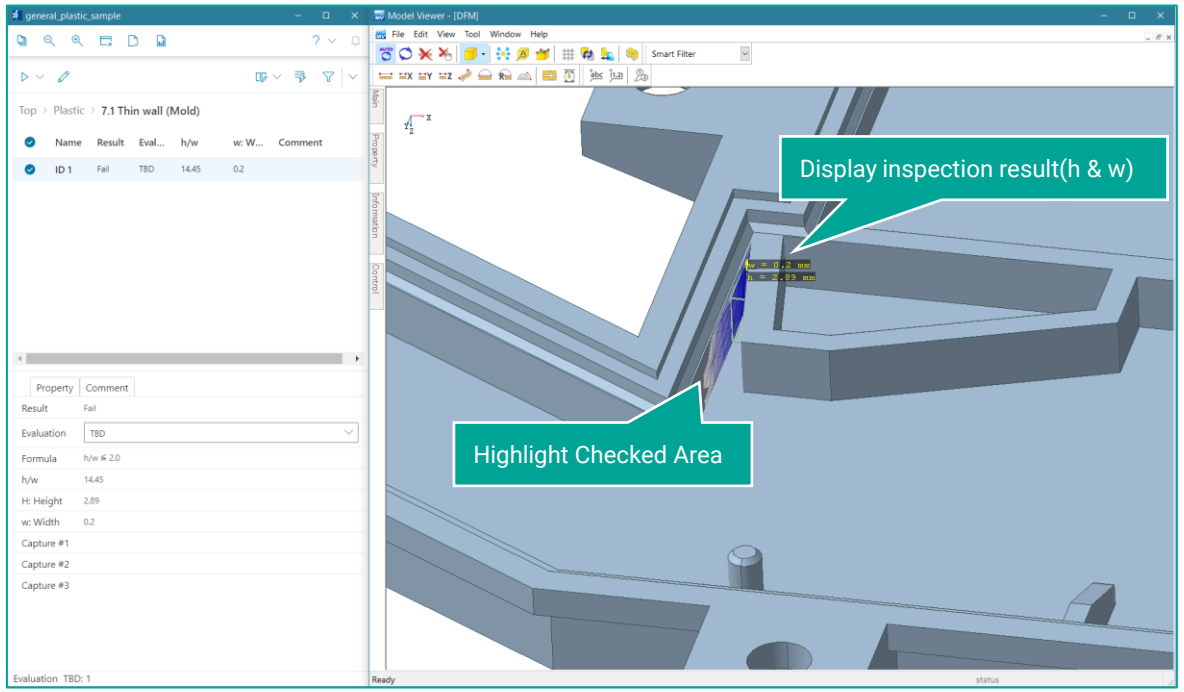

© 2022 Elysium – Confidential & Proprietary

Inspection item: 7.1 Thin wall (Mold)

4. How to Analyze Check Result in Inspector / Model Viewer (Details)

Click a checked area in Item List of Inspector to show the check result in Property List. Also, right-click a checked area in Item List, and select following view commands from the context menu to analyze the selected checked area in Model Viewer.

View operation command	Description
Highlight Checked Area	Blue: Thin wall (mold)
Highlight Checked Area (Without Dimension)	Hide dimensions when highlighted
Fit to Checked Area	Fit to the target checked area
Section View	Section view of the target thin area
Hide Surroundings	Only faces around the target thin area are displayed only
Section View + Hide Surroundings	Display section view with only faces around the target thin area
Simple View	Reset the selected View operation command
Show Selected Only	Only the selected target thin area is displayed in the list (filtering functionality)
Edit Property	Screen for adding evaluation and comments will be displayed

Fit to Checked Area

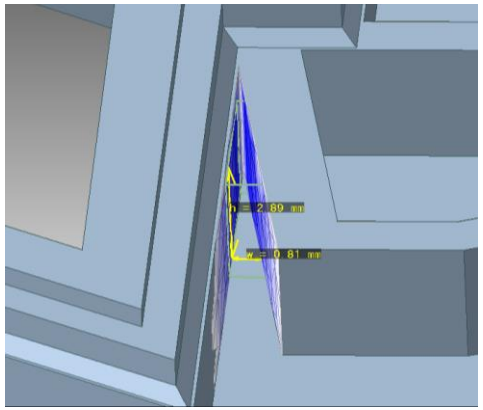

Section View

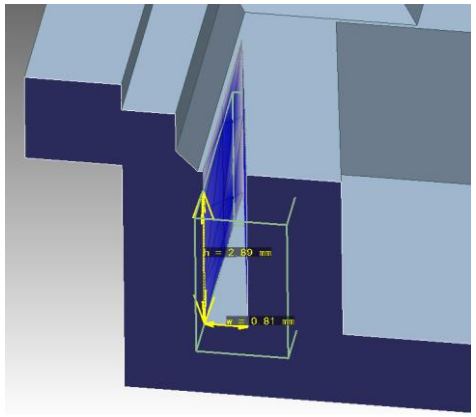

Hide Surroundings

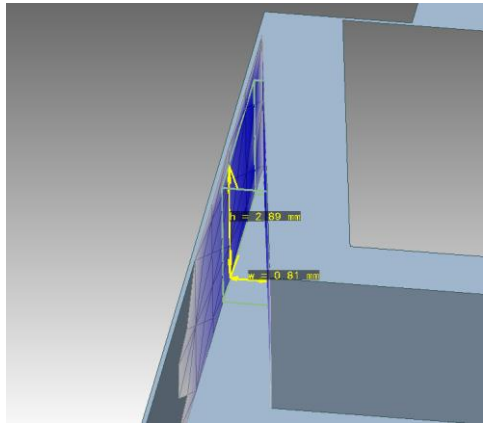

Section View + Hide Surroundings

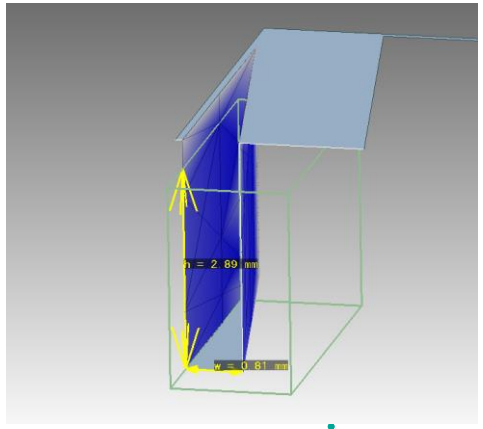

© 2022 Elysium – Confidential & Proprietary

Hole

© 2022 Elysium – Confidential & Proprietary

ELYSIUM

Inspection item: 8.1 Hole: Pilot hole diameter

Description of Check Criterion & Possible Molding Defects

<Summary>

Detect the pilot hole diameter of holes of specified dimensions and holes with non-specified dimensions.

Molding Defects

If the pilot hole diameter is not appropriate, there is a high possibility that cracks will occur during fastening and problems such as poor assembly can occur.

1. How to Check & Prerequisites

<How to Check>

Verify the prepare hole diameter (d) of the round hole (through or blind) is within the specified threshold or not.

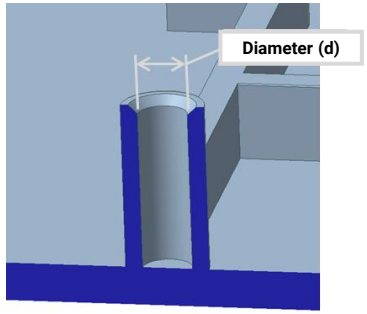

<Prerequisites>

Geometry recognition is completed on ‘Round hole’.

2. How to Judge & Default Value

<Default Value>

Pilot hole diameter | Standard diameters by table PreparedHoleDiam.Table=line{1.35|2.34|2.45|2.50|3.45|3.5}

<How to Judge>

If all values in PreparedHoleDiam.Table ≠ d, it is judged as FAIL.

3. How to Analyze Check Result in Inspector / Model Viewer (Overview)

Inspection results will be listed in Item List of Inspector. When you click on the left of ‘Name’, all target inspection results will be highlighted along with the dimensions displayed.

View operation command	Description
Highlight Checked Area	Green: Holes with the diameter listed in the PreparedHoleDiam.Table Red: Other holes

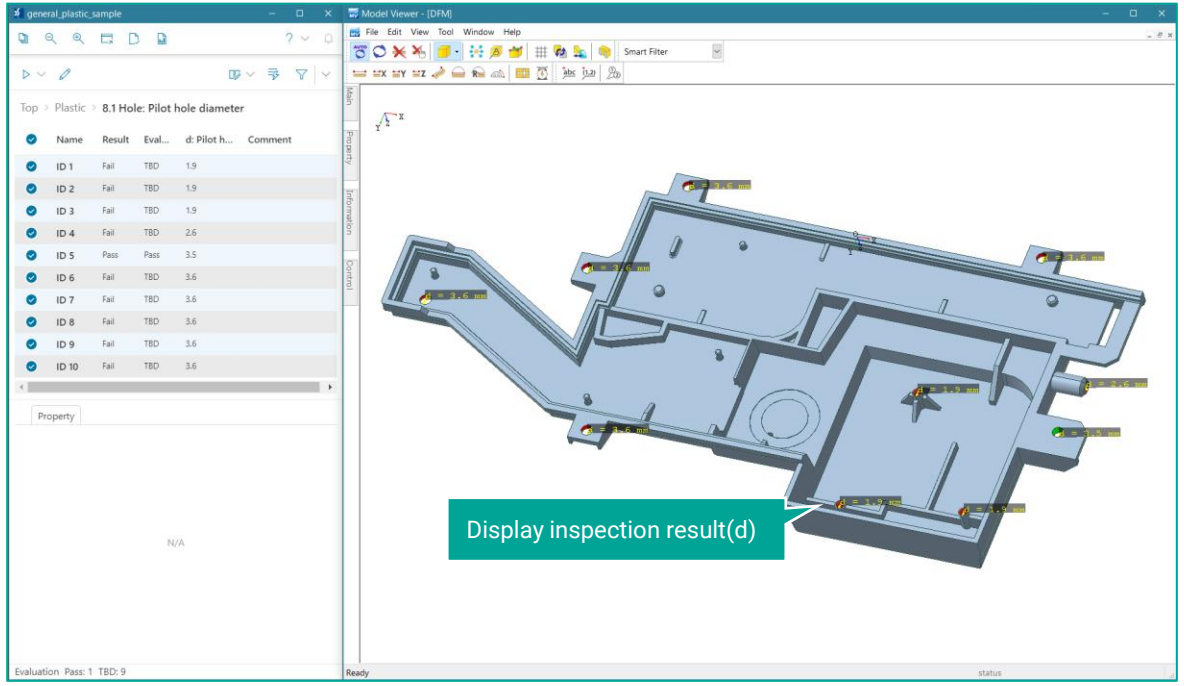

© 2022 Elysium – Confidential & Proprietary

ELYSIUM

Inspection item: 8.1 Hole: Pilot hole diameter

4. How to Analyze Check Result in Inspector / Model Viewer (Details)

Click a checked area in Item List of Inspector to show the check result in Property List. Also, right-click a checked area in Item List, and select following view commands from the context menu to analyze the selected checked area in Model Viewer.

View operation command	Description
Highlight Checked Area	Green: Holes with the diameter listed in the PreparedHoleDiam.Table Red: Other holes
Highlight Checked Area (Without Dimension)	Hide dimensions when highlighted
Fit to Checked Area	Fit to the target hole
Section View	Section view of the target hole
Hide Surroundings	Only faces around the target hole are displayed only
Section View + Hide Surroundings	Display section view with only faces around the target hole
Simple View	Reset the selected View operation command
Show Selected Only	Only the selected target hole is displayed in the list (filtering functionality)
Edit Property	Screen for adding evaluation and comments will be displayed

Fit to Checked Area

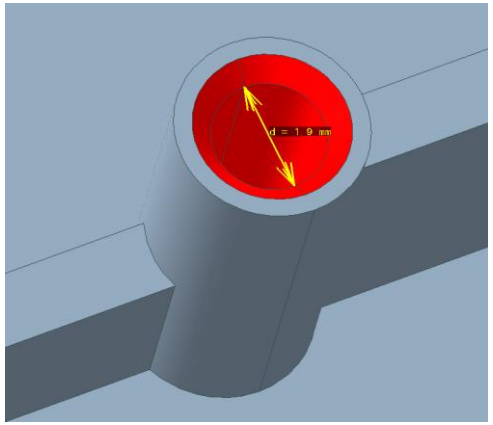

Section View

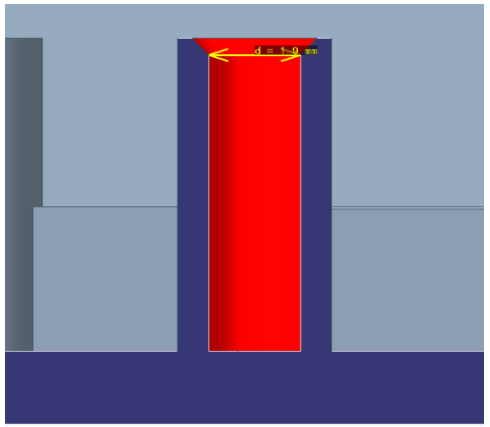

Hide Surroundings

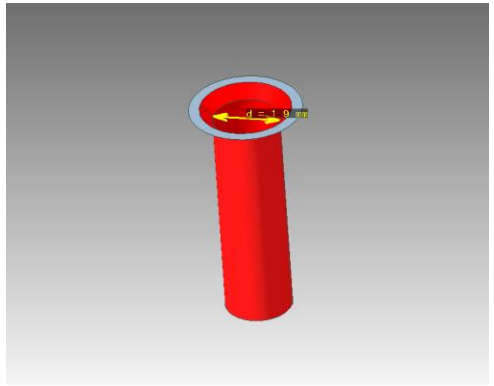

Section View + Hide Surroundings

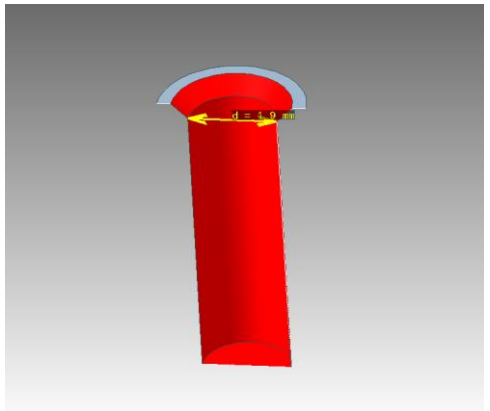

© 2022 Elysium – Confidential & Proprietary

Inspection item: 8.2 Hole: Chamfer width

Description of Check Criterion & Possible Molding Defects

<Summary>

Detect the chamfer around the hole edge.

Molding Defects

Pilot holes that do not have proper chamfer can lead to problems such as poor assembly.

1. How to Check & Prerequisites

<How to Check>

Verify the chamfer width (c) of the round hole (through or blind) is within the specified threshold or not.

<Prerequisites>

Geometry recognition is completed on ‘Round hole’.

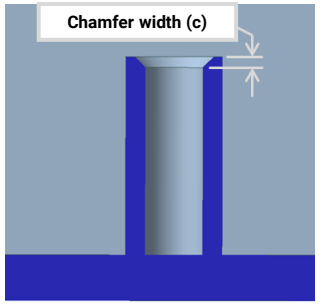

2. How to Judge & Default Value

<Default Value>
Hole chamfer width | Min. width tol
HoleChamferWidth.Min=0.3mm
<How to Judge>

If c<HoleChamferWidth.Min, it is judged as FAIL.

3. How to Analyze Check Result in Inspector / Model Viewer (Overview)

Inspection results will be listed in Item List of Inspector. When you click on the left of ‘Name’, all target inspection results will be highlighted along with the dimensions displayed.

View operation command	Description
Highlight Checked Area	Green: PASS results Red: FAIL results

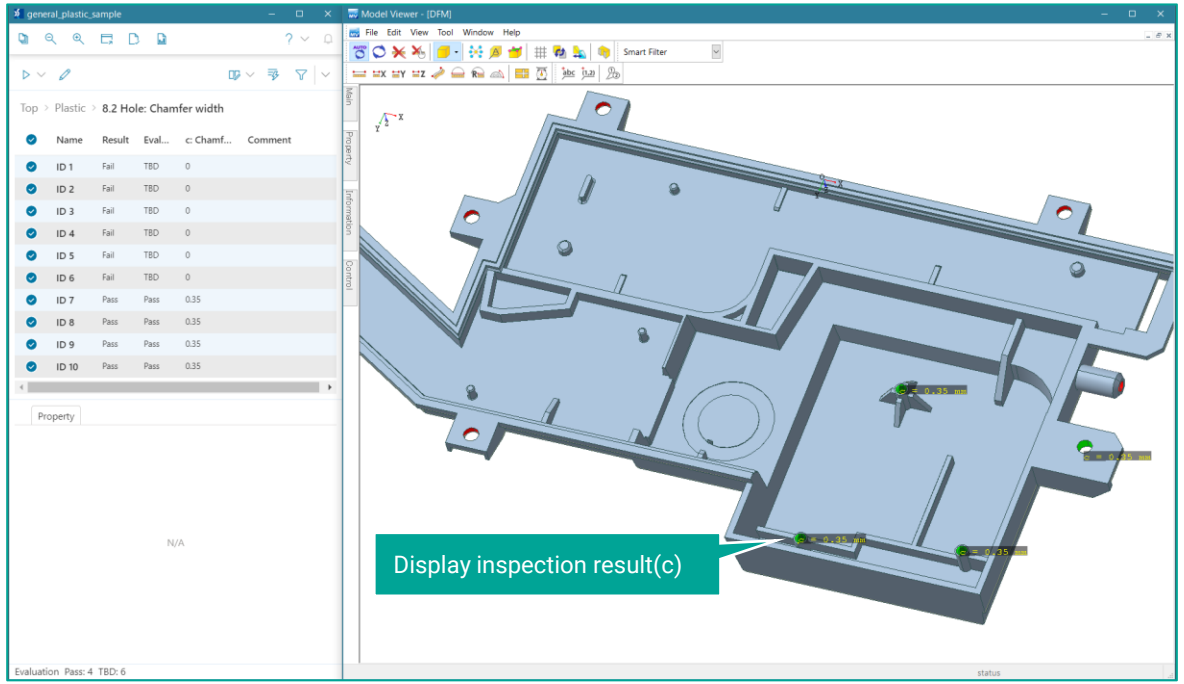

© 2022 Elysium – Confidential & Proprietary

Inspection item: 8.2 Hole: Chamfer width

4. How to Analyze Check Result in Inspector / Model Viewer (Details)

Click a checked area in Item List of Inspector to show the check result in Property List. Also, right-click a checked area in Item List, and select following view commands from the context menu to analyze the selected checked area in Model Viewer.

View operation command	Description
Highlight Checked Area	Green: PASS results Red: FAIL results
Highlight Checked Area (Without Dimension)	Hide dimensions when highlighted
Fit to Checked Area	Fit to the target hole
Section View	Section view of the target hole
Hide Surroundings	Only faces around the target hole are displayed only
Section View + Hide Surroundings	Display section view with only faces around the target hole
Simple View	Reset the selected View operation command
Show Selected Only	Only the selected target hole is displayed in the list (filtering functionality)
Edit Property	Screen for adding evaluation and comments will be displayed

Fit to Checked Area

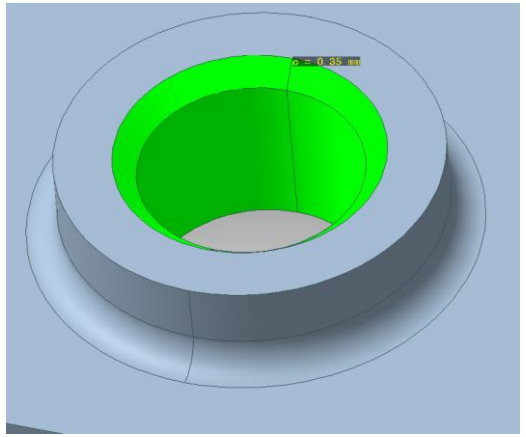

Section View

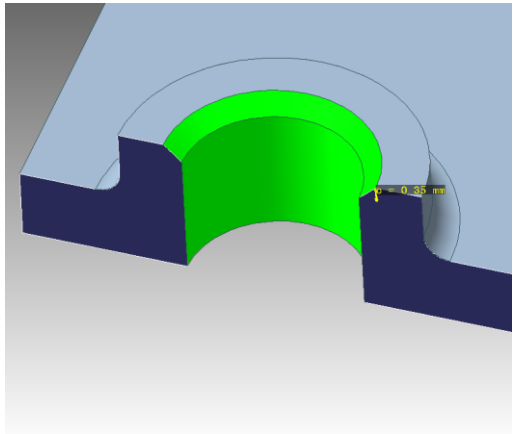

Hide Surroundings

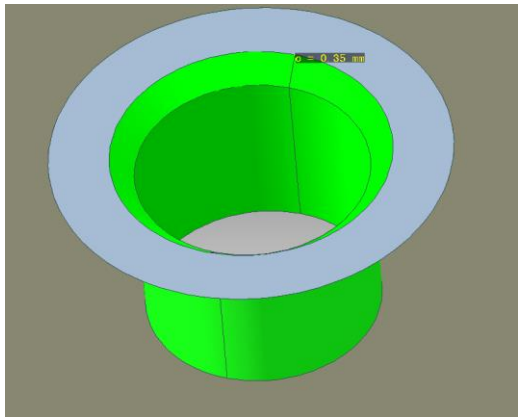

Section View + Hide Surroundings

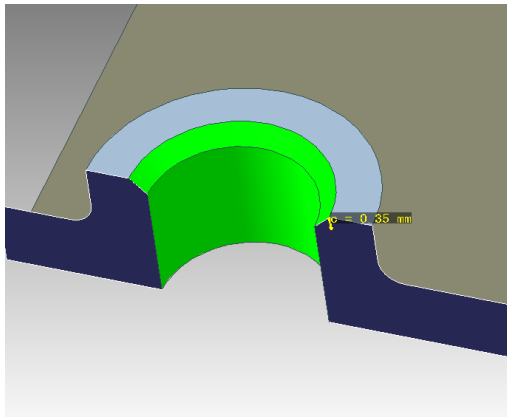

© 2022 Elysium – Confidential & Proprietary

Inspection item: 8.3 Hole: Through or blind

Description of Check Criterion & Possible Molding Defects

<Summary>

Detect whether the round hole is through or blind hole

Molding Defects

It is desirable that holes for self-tapping boss are non through hole. It can lead to problems such as poor assembly if it is a through hole. It is necessary to use through or blind holes properly according to the usage.

1. How to Check & Prerequisites

<How to Check>

Verify whether the round hole is through or blind.

<Prerequisites>

Geometry recognition is completed on ‘Round hole’.

2. How to Judge & Default Value

<Default Value>
None

<How to Judge>
None

3. How to Analyze Check Result in Inspector / Model Viewer (Overview)

Inspection results will be listed in Item List of Inspector. When you click on the left of ‘Name’, all target inspection results will be highlighted along with the dimensions displayed.

View operation command	Description
Highlight Checked Area	Green: Recognized holes

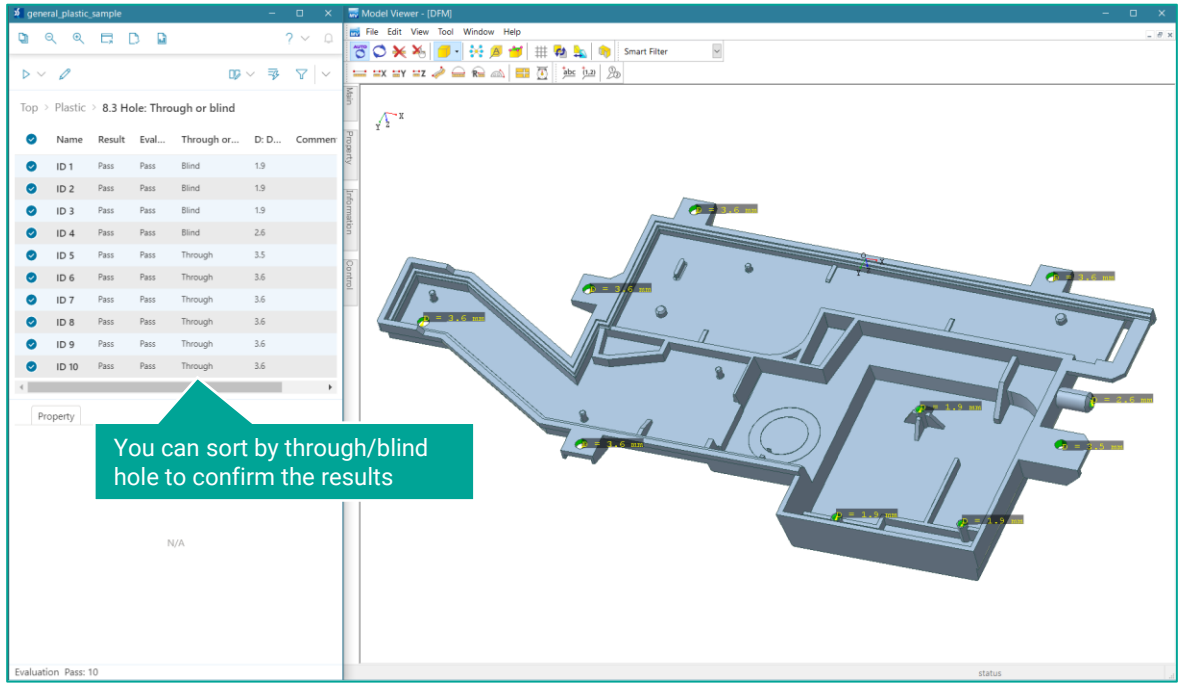

© 2022 Elysium – Confidential & Proprietary

Inspection item: 8.3 Hole: Through or blind

4. How to Analyze Check Result in Inspector / Model Viewer (Details)

Click a checked area in Item List of Inspector to show the check result in Property List. Also, right-click a checked area in Item List, and select following view commands from the context menu to analyze the selected checked area in Model Viewer.

View operation command	Description
Highlight Checked Area	Green: Recognized holes
Highlight Checked Area (Without Dimension)	Hide dimensions when highlighted
Fit to Checked Area	Fit to the target hole
Section View	Section view of the target hole
Hide Surroundings	Only faces around the target hole are displayed only
Section View + Hide Surroundings	Display section view with only faces around the target hole
Simple View	Reset the selected View operation command
Show Selected Only	Only the selected target hole is displayed in the list (filtering functionality)
Edit Property	Screen for adding evaluation and comments will be displayed

Fit to Checked Area

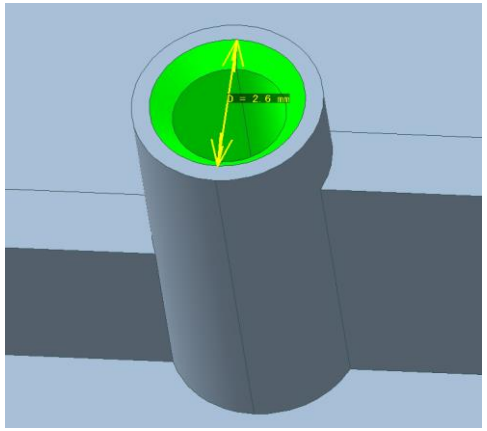

Section View

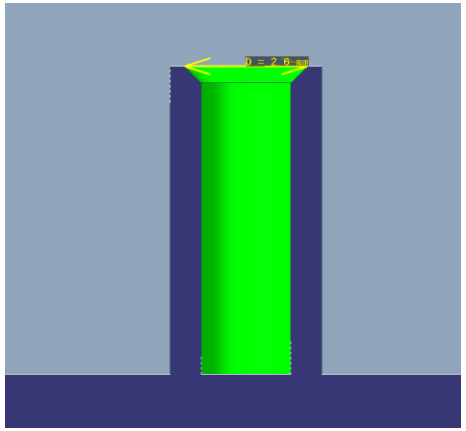

Hide Surroundings

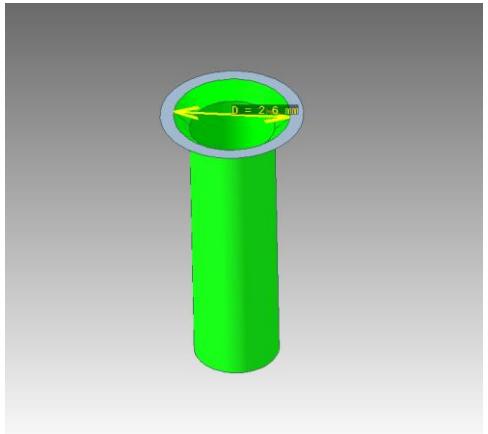

Section View + Hide Surroundings

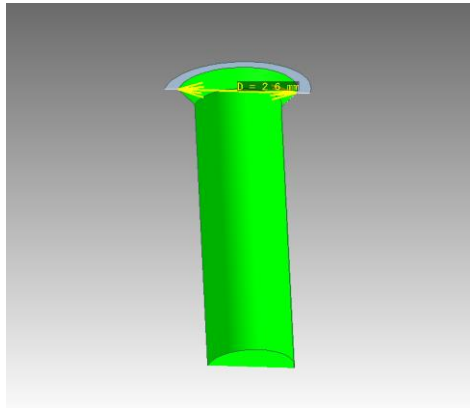

© 2022 Elysium – Confidential & Proprietary

Inspection item: 8.4 Hole: Depth to pilot hole diameter ratio

Description of Check Criterion & Possible Molding Defects

<Summary>

Detect long narrow holes

Molding Defects

For molds that required elongated pins, there is a chance where the thickness of the molded product may be uneven due to deflection of the pin during filling. Also, it might lead to fail mold release.

1. How to Check & Prerequisites

<How to Check>

Verify the ratio of pilot hole diameter (d)and the hole depth of the round hole (through or blind) is within the specified threshold or not.

<Prerequisites>

Geometry recognition is completed on ‘Round hole’.

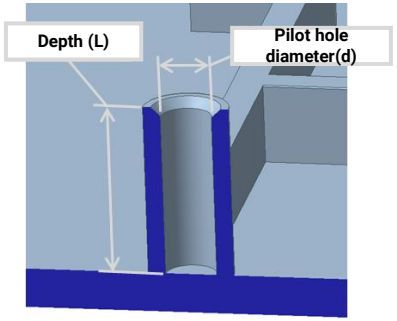

2. How to Judge & Default Value

<Default Value> Hole depth to pilot hole diameter ratio (Through) | Max. ratio tol HoleDepthPreparedHoleDiamRatio.Max0=5.0

Hole depth to pilot hole diameter ratio (Blind) | Max. ratio tol HoleDepthPreparedHoleDiamRatio.Max1=5.0

<How to Judge>

If L/d>HoleDepthPreparedHoleDiamRatio.Max0 or 1, it is judged as FAIL.

3. How to Analyze Check Result in Inspector / Model Viewer (Overview)

Inspection results will be listed in Item List of Inspector. When you click on the left of ‘Name’, all target inspection results will be highlighted along with the dimensions displayed.

View operation command	Description
Highlight Checked Area	Green: PASS results Red: FAIL results

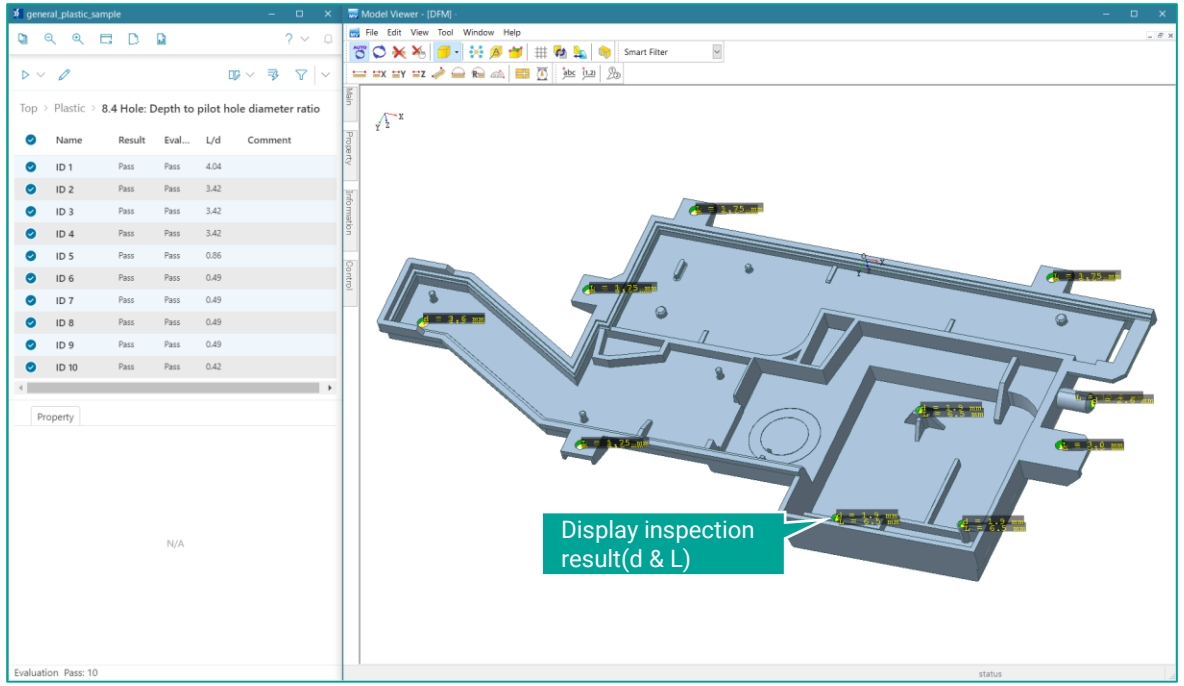

© 2022 Elysium – Confidential & Proprietary

Inspection item: 8.4 Hole: Depth to pilot hole diameter ratio

4. How to Analyze Check Result in Inspector / Model Viewer (Details)

Click a checked area in Item List of Inspector to show the check result in Property List. Also, right-click a checked area in Item List, and select following view commands from the context menu to analyze the selected checked area in Model Viewer.

View operation command	Description
Highlight Checked Area	Green: PASS results Red: FAIL results
Highlight Checked Area (Without Dimension)	Hide dimensions when highlighted
Fit to Checked Area	Fit to the target hole
Section View	Section view of the target hole
Hide Surroundings	Only faces around the target hole are displayed only
Section View + Hide Surroundings	Display section view with only faces around the target hole
Simple View	Reset the selected View operation command
Show Selected Only	Only the selected target hole is displayed in the list (filtering functionality)
Edit Property	Screen for adding evaluation and comments will be displayed

Fit to Checked Area

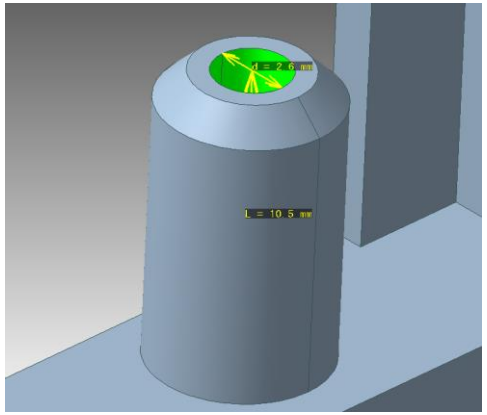

Section View

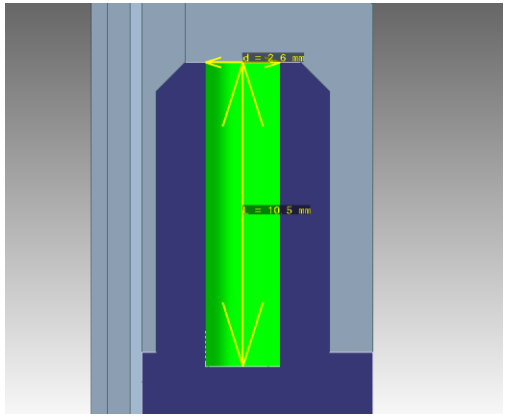

Hide Surroundings

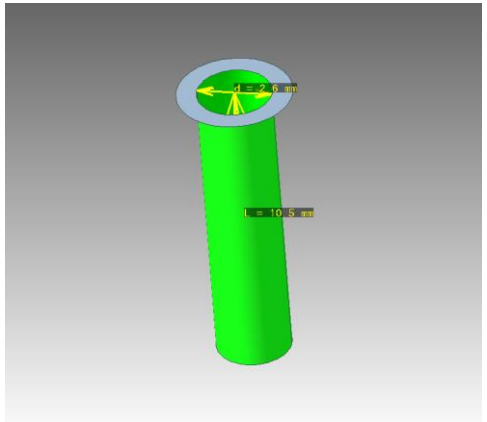

Section View + Hide Surroundings

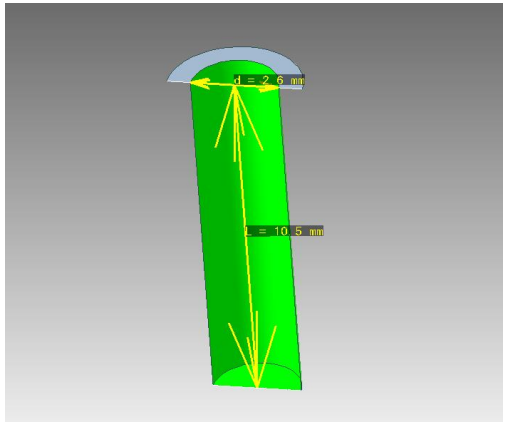

© 2022 Elysium – Confidential & Proprietary

Inspection item: 8.5 Hole: Distance between holes

Description of Check Criterion & Possible Molding Defects

<Summary>

Detect holes that are close to each other

Molding Defects

If the distance between holes is insufficient, it is necessary to devise an insert structure for the mold. Therefore, it can increase the cost of the mold.

1. How to Check & Prerequisites

<How to Check>

Verify the distance between the round holes (d) is greater than or equal to the threshold. However, boss holes are not included.

<Prerequisites>

Geometry recognition is completed on ‘Round hole’.

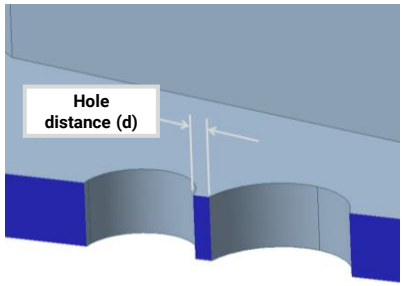

2. How to Judge & Default Value

<Default Value>

Distance between holes | Min. distance tol
HolesDistance.Min=3.0mm

<How to Judge>

If d<HolesDistance.Min, it is judged as FAIL.

3. How to Analyze Check Result in Inspector / Model Viewer (Overview)

Inspection results will be listed in Item List of Inspector. When you click on the left of ‘Name’, all target inspection results will be highlighted along with the dimensions displayed.

View operation command	Description
Highlight Checked Area	Red: Holes that don’t have enough distance between holes (FAIL results)

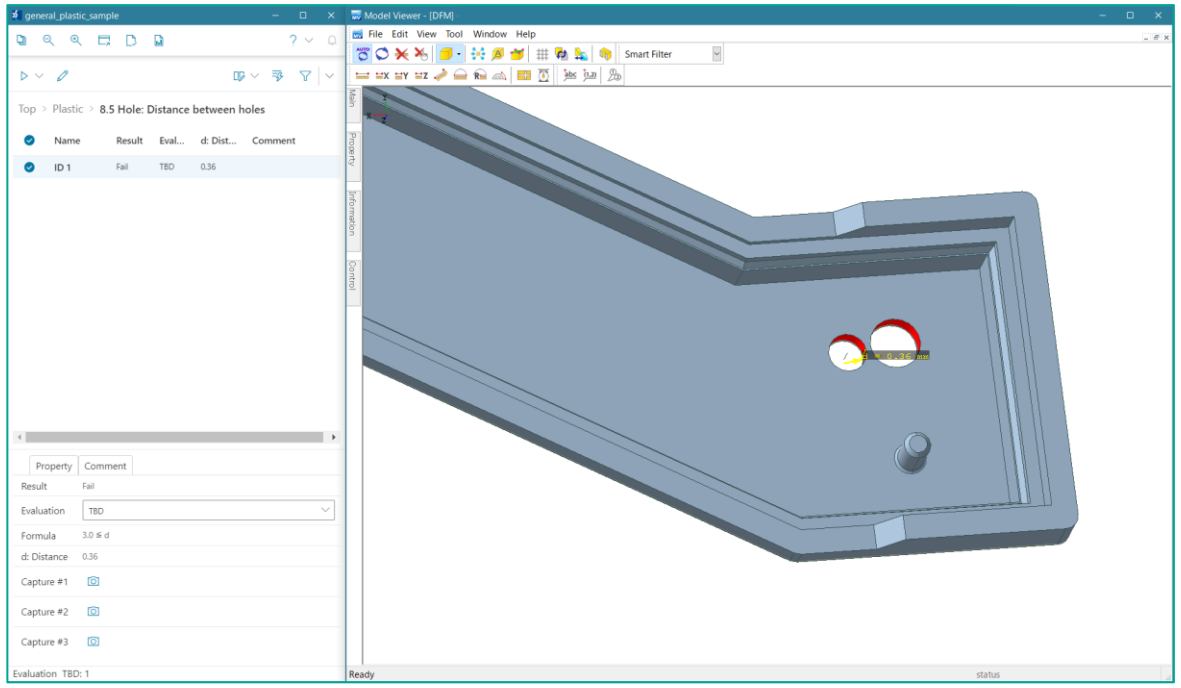

© 2022 Elysium – Confidential & Proprietary

ELYSIUM

Inspection item: 8.5 Hole: Distance between holes

4. How to Analyze Check Result in Inspector / Model Viewer (Details)

Click a checked area in Item List of Inspector to show the check result in Property List. Also, right-click a checked area in Item List, and select following view commands from the context menu to analyze the selected checked area in Model Viewer.

View operation command	Description
Highlight Checked Area	Red: Holes that don't have enough distance between holes (FAIL results)
Highlight Checked Area (Without Dimension)	Hide dimensions when highlighted
Fit to Checked Area	Fit to the target holes
Section View	Section view of the target holes
Hide Surroundings	Only faces around the target holes are displayed only
Section View + Hide Surroundings	Display section view with only faces around the target holes
Simple View	Reset the selected View operation command
Show Selected Only	Only the selected target hole is displayed in the list (filtering functionality)
Edit Property	Screen for adding evaluation and comments will be displayed

Fit to Checked Area

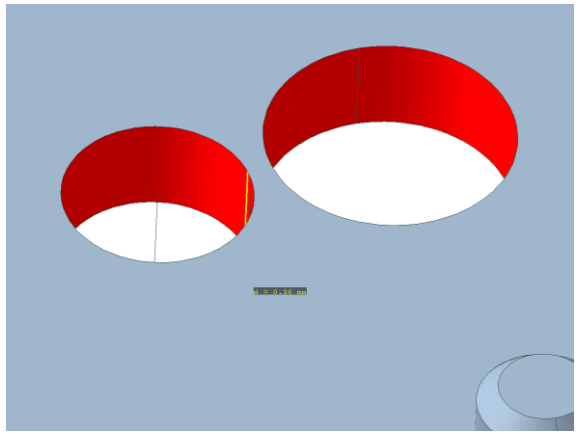

Section View

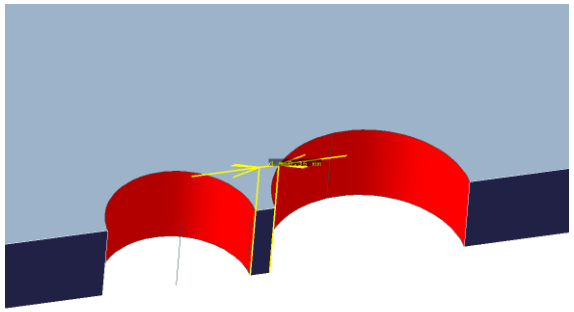

Hide Surroundings

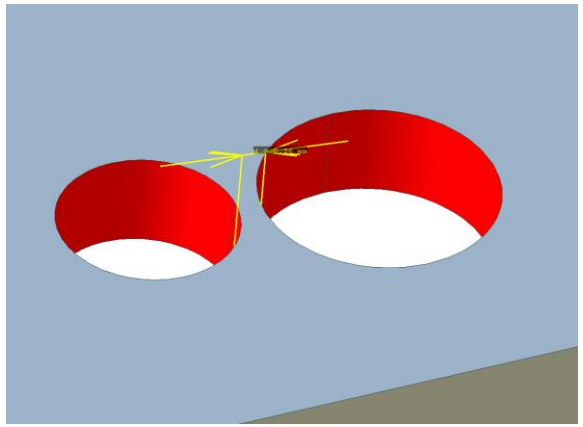

Section View + Hide Surroundings

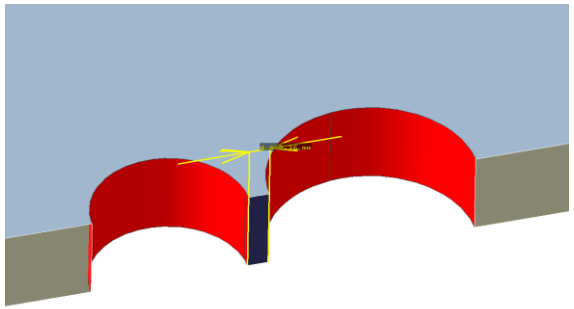

© 2022 Elysium – Confidential & Proprietary

Inspection item: 8.6 Hole: Hole information

Description of Check Criterion & Possible Molding Defects

<Summary>

Detect holes and display the related dimension information.

Information

ost of production may be calculated depending on the hole specification.

1. How to Check & Prerequisites

<How to Check>

Measure the axial direction, hole diameter (D), depth (L) of through, Blind holes.

<Prerequisites>

Geometry recognition is completed on ‘Round hole’.

2. How to Judge & Default Value

<Default Value>
None

<How to Judge>
None

3. How to Analyze Check Result in Inspector / Model Viewer (Overview)

Inspection results will be listed in Item List of Inspector. When you click on the left of ‘Name’, all target inspection results will be highlighted along with the dimensions displayed.

View operation command	Description
Highlight Checked Area	Green: Recognized holes

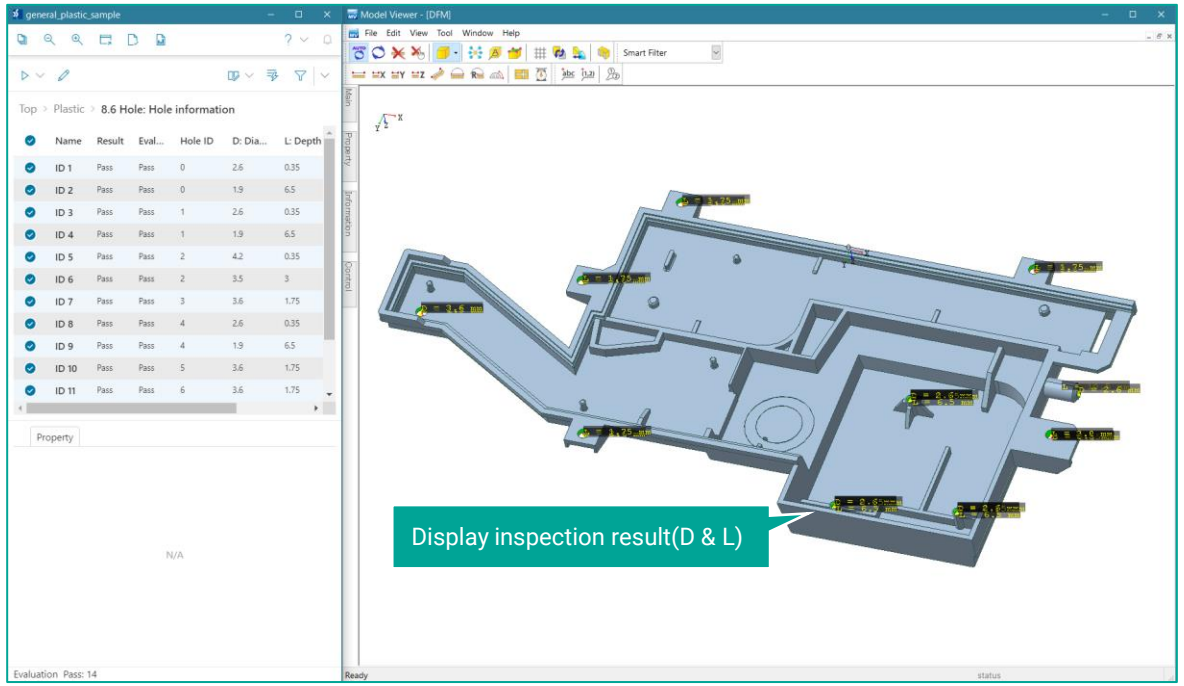

© 2022 Elysium – Confidential & Proprietary

Inspection item: 8.6 Hole: Hole information

4. How to Analyze Check Result in Inspector / Model Viewer (Details)

Click a checked area in Item List of Inspector to show the check result in Property List. Also, right-click a checked area in Item List, and select following view commands from the context menu to analyze the selected checked area in Model Viewer.

View operation command	Description
Highlight Checked Area	Green: Recognized holes
Highlight Checked Area (Without Dimension)	Hide dimensions when highlighted
Fit to Checked Area	Fit to the target hole
Section View	Section view of the target hole
Hide Surroundings	Only faces around the target hole are displayed only
Section View + Hide Surroundings	Display section view with only faces around the target hole
Simple View	Reset the selected View operation command
Show Selected Only	Only the selected target hole is displayed in the list (filtering functionality)
Edit Property	Screen for adding evaluation and comments will be displayed

Section View (Blind Hole Spot Face)

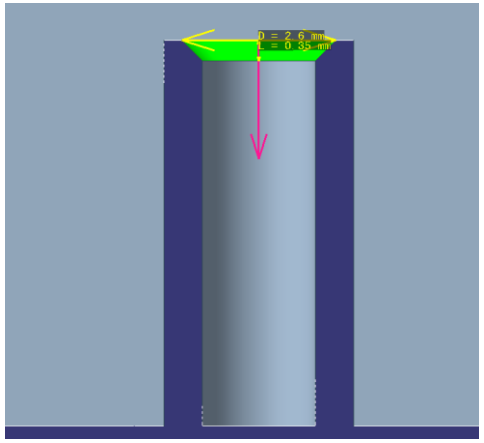

Section View (Blind Pilot Hole)

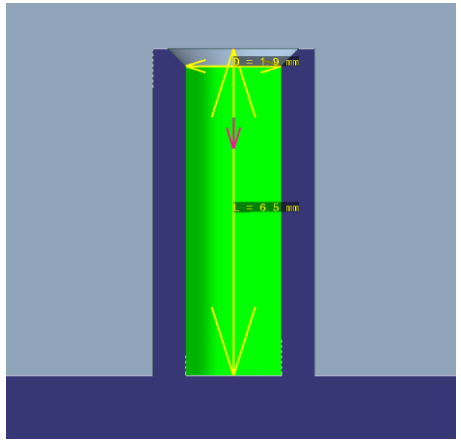

Section View (Through Hole)

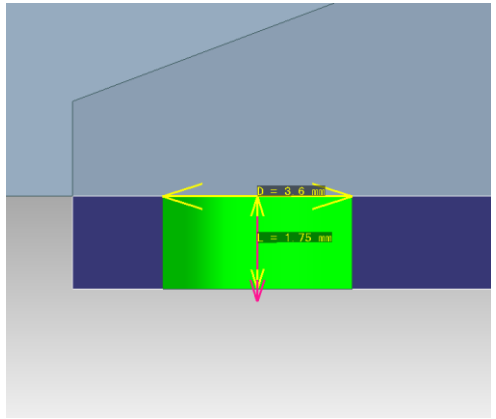

Hide Surroundings

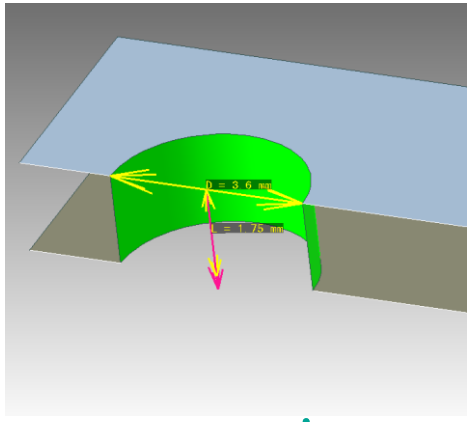

© 2022 Elysium – Confidential & Proprietary

Draft Angle

© 2022 Elysium – Confidential & Proprietary

ELYSIUM

Inspection item: 9.1 Draft angle

Description of Check Criterion & Possible Molding Defects

<Summary>

Detect areas where the draft angle is insufficient

Molding Defects

Insufficient draft angle can lead to defects when releasing the mold. Also, it can shorten the lifespan of the mold.

1. How to Check & Prerequisites

<How to Check>

Verify the draft angle of each face based on the 'DraftAngleRange.Table'.

<Prerequisites>

Geometry recognition is completed on 'Draft angle' and 'Draft direction'.

2. How to Judge & Default Value

<Default Value>

Draft angle | Angle ranges for classification by table
DraftAngleRange.Table=line{-90,0.0|0.0,1.0|1.0,2.0|2.0,3.0|3.0,60

<How to Judge>

Specify the angle range via (<=,<), separated by '|'. You can specify five ranges, and the faces with the draft angle in each range will be recognized.

3. How to Analyze Check Result in Inspector / Model Viewer (Overview)

Inspection results will be listed in Item List of Inspector. When you click on the left of 'Name', all target inspection results will be highlighted along with the dimensions displayed.

View operation command	Description
Highlight Checked Area	Highlight the face determined to have a draft angle in range #1 in light blue range #2 in red, range #3 in pink range #4 in yellow and range #5 in green.

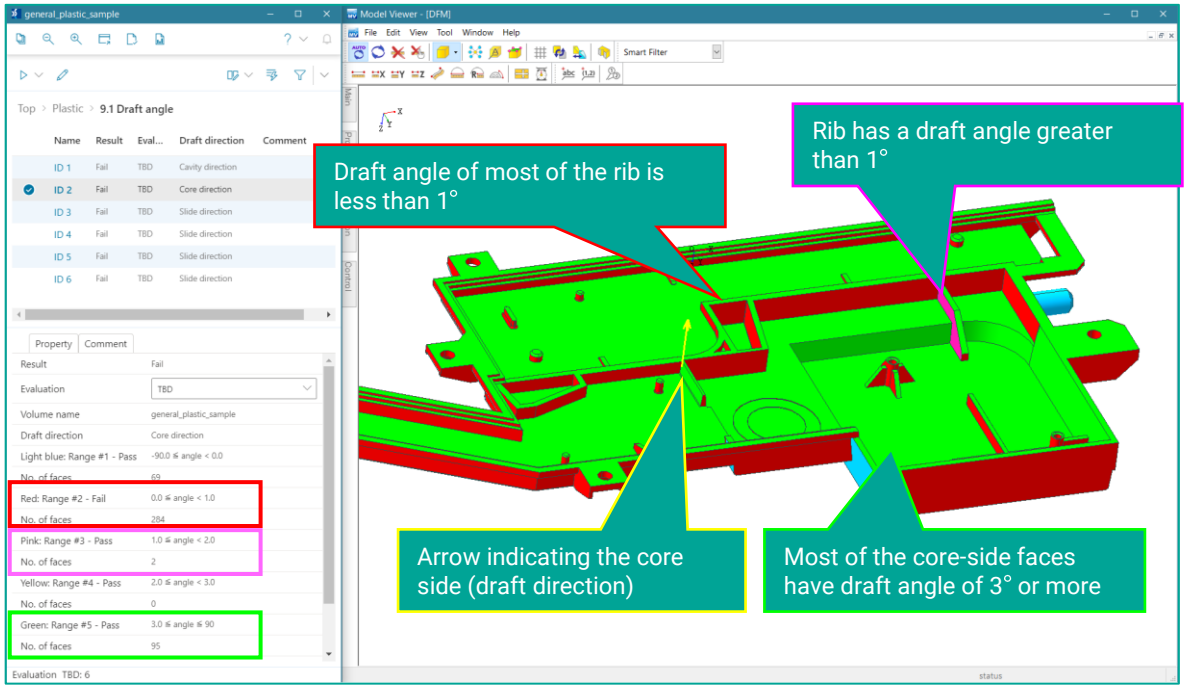

© 2022 Elysium – Confidential & Proprietary

Inspection item: 9.1 Draft angle

4. Details display of draft angle

If you want to display the draft angle result in detail, please enable the following (change to true).

Parameter Name	Initial Value	Details
Draft angle | Whether to divide a face into draft angle ranges CheckPrecisely.Flag	false	Enable if you want to view in detail

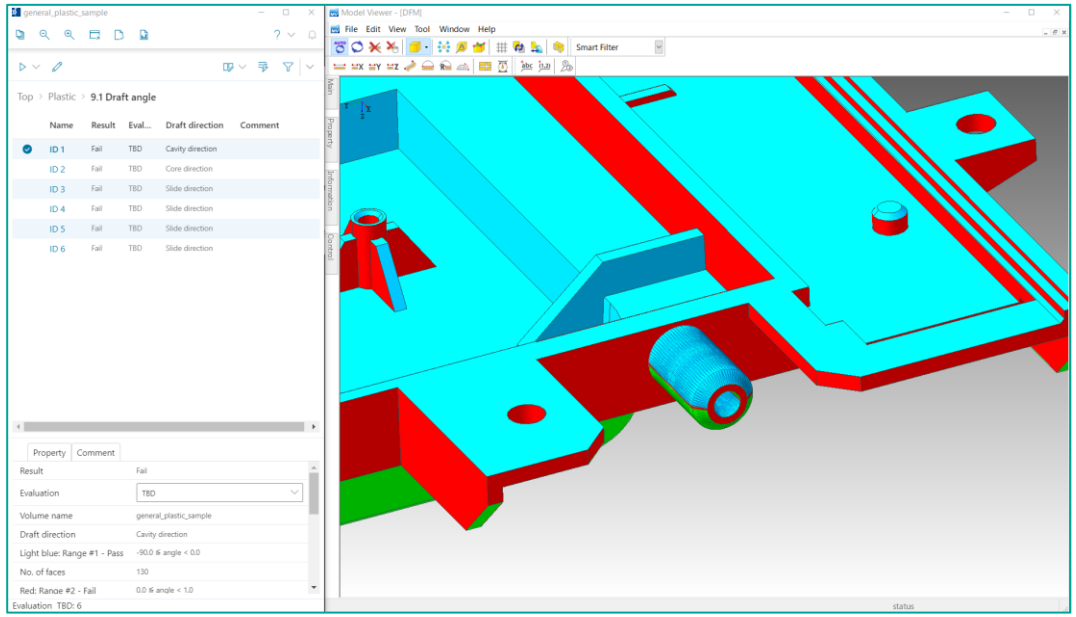

5. List display of draft angle

If you want to list the draft angle results, enable the following (change to true).

Parameter Name	Initial Value	Details
Draft angle | Whether to show the check result for each draft direction CheckEachErrorArea.Flag	false	Enable when you want to list the draft angle for each area and check

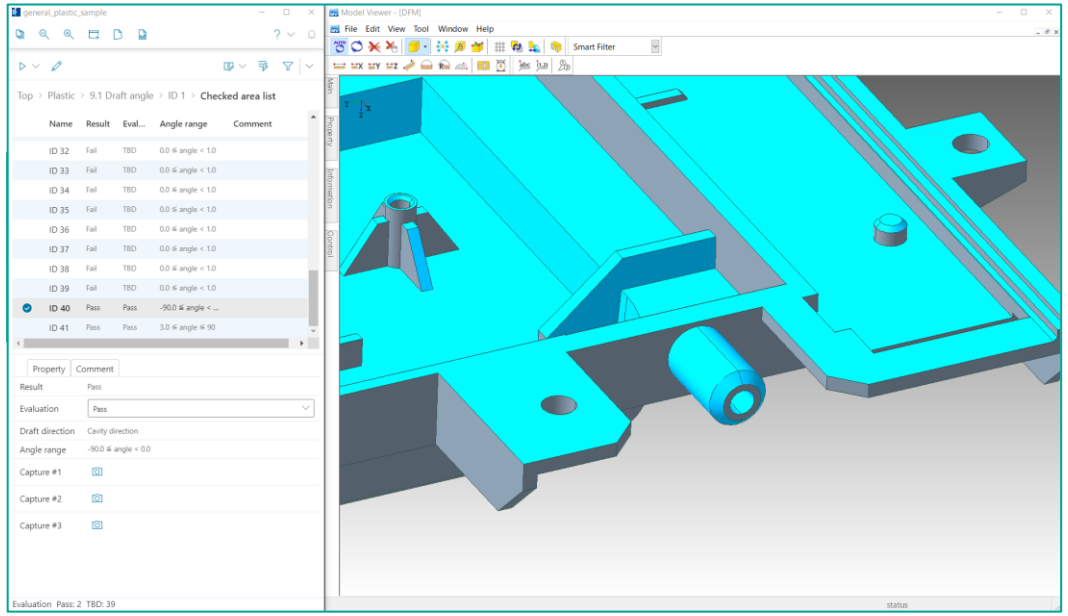

© 2022 Elysium – Confidential & Proprietary

Model Information

© 2022 Elysium – Confidential & Proprietary

ELYSIUM

Inspection item: A.1 Bounding box size

Description of Check Criterion & Possible Molding Defects

<Summary>

Detect the bounding box size of the part.

<Information>

Provide information on deciding the mold size.

1. How to Check & Prerequisites

<How to Check>

Measure the Oriented Bounding Box (OBB) of the part.

<Prerequisites>

Geometry recognition is completed on ‘Draft direction’.

2. How to Judge & Default Value

<Default Value>

None

<How to Judge>

None

3. How to Analyze Check Result in Inspector / Model Viewer (Overview)

Inspection results will be listed in Item List of Inspector. The length of each side of the bounding box is also displayed on the model.

View operation command	Description
Highlight Checked Area	Length of each side of the bounding box

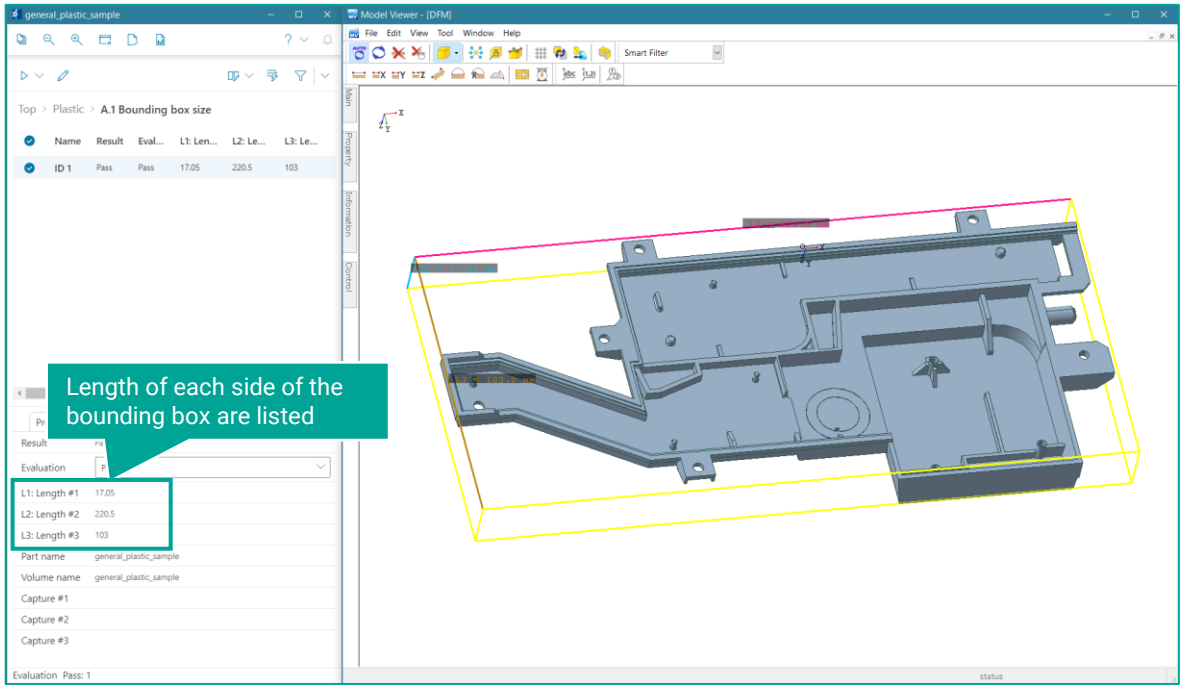

© 2022 Elysium – Confidential & Proprietary

Inspection item: A.2 Volume

Description of Check Criterion & Possible Molding Defects

<Summary>

Calculate the volume of the part.

<Information>

Provide information for calculating the weight of molded products and the required raw materials.

1. How to Check & Prerequisites

<How to Check>

Measure the volume of the part.

<Prerequisites>

Geometry recognition is completed on ‘Draft direction’.

2. How to Judge & Default Value

<Default Value>

None

<How to Judge>

None

3. How to Analyze Check Result in Inspector / Model Viewer (Overview)

Inspection results will be listed in Item List of Inspector. The target volume (part) is highlighted.

View operation command	Description
Highlight Checked Area	Target volume (part) is highlighted

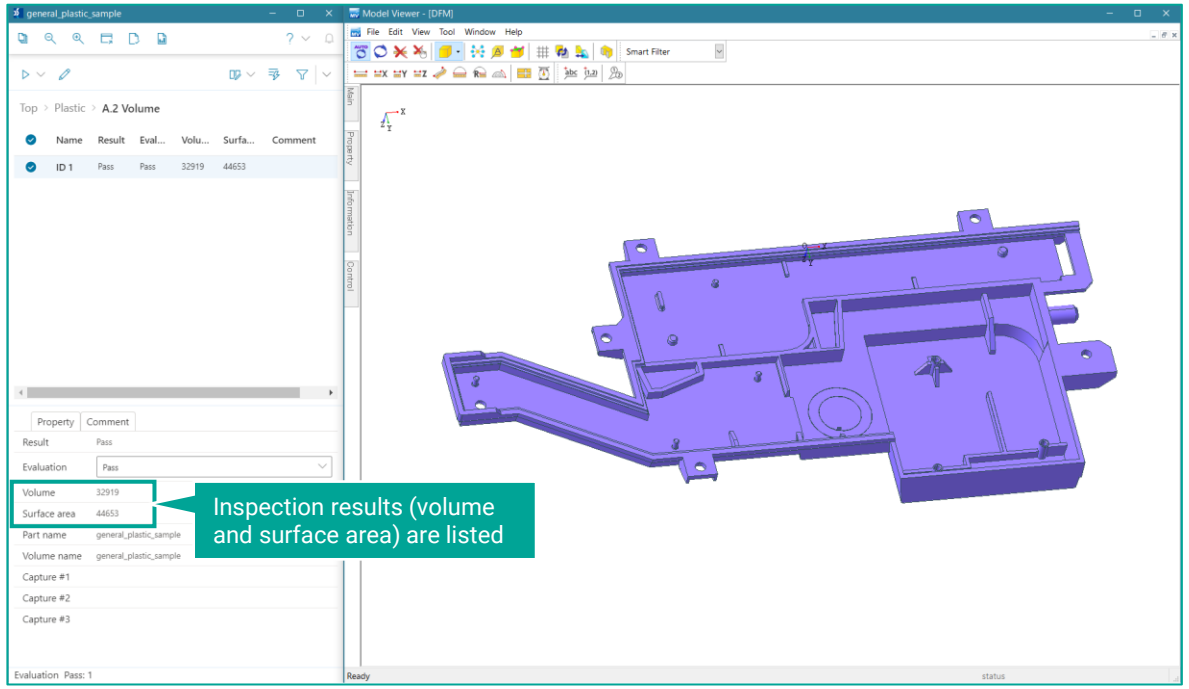

© 2022 Elysium – Confidential & Proprietary

Inspection item: A.3 Projection area size

Description of Check Criterion & Possible Molding Defects

<Summary>

Calculate the projected area on a plane perpendicular to the draft direction

<Information>

Projected area is the sum of the areas of all the surfaces projected in the cavity direction.

1. How to Check & Prerequisites

<How to Check>

Measure the projected area of the part when it is projected in the direction of the cavity.

<Prerequisites>

Geometry recognition is completed on ‘Draft direction’.

2. How to Judge & Default Value

<Default Value>

None

<How to Judge>

None

3. How to Analyze Check Result in Inspector / Model Viewer (Overview)

Inspection results will be listed in Item List of Inspector. Projected area size in the cavity direction of the model is displayed.

View operation command	Description
Highlight Checked Area	Target volume (part) is highlighted

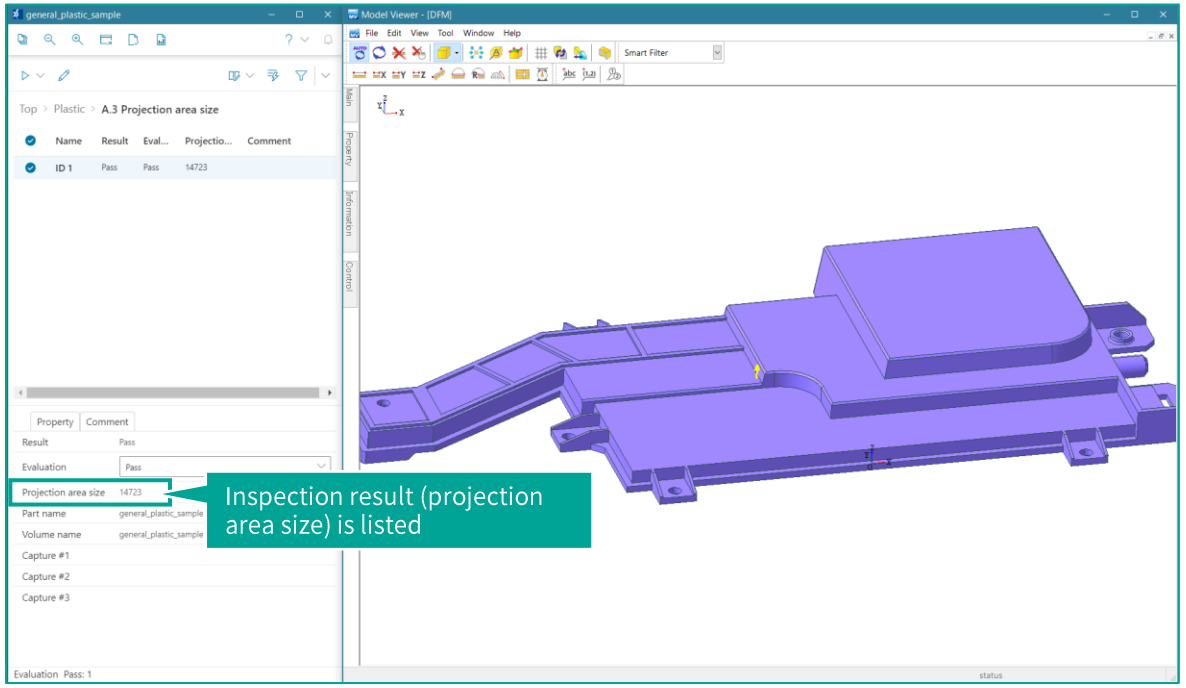

© 2022 Elysium – Confidential & Proprietary

Inspection item: A.4 Bounding box size (XYZ)

Description of Check Criterion & Possible Molding Defects

<Summary>

Calculate the bounding box size in XYZ directions.

<Information>

Provide information for calculating the mold size.

1. How to Check & Prerequisites

<How to Check>

Measure the size of the part in each of the X, Y, and Z direction.

<Prerequisites>

Geometry recognition is completed on ‘Draft direction’.

2. How to Judge & Default Value

<Default Value>

None

<How to Judge>

None

3. How to Analyze Check Result in Inspector / Model Viewer (Overview)

Inspection results will be listed in Item List of Inspector. The length of each side of the bounding box is displayed on the model.

View operation command	Description
Highlight Checked Area	Length of each side of the bounding box is displayed

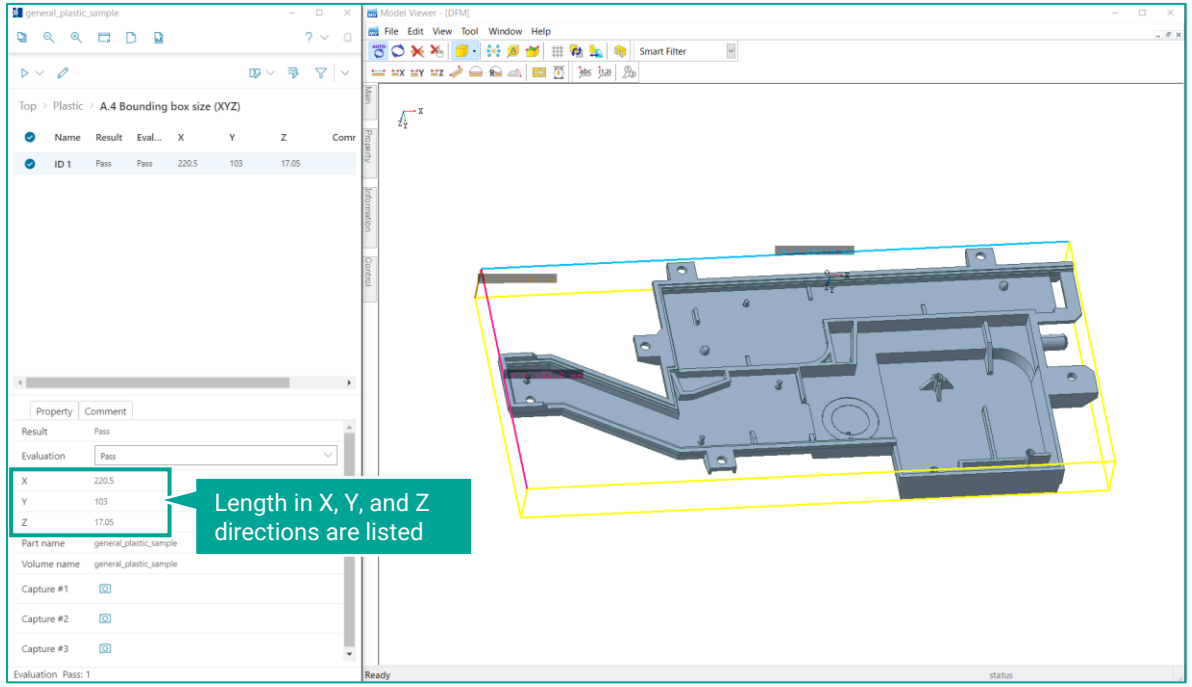

© 2022 Elysium – Confidential & Proprietary

Inspection item: A.5 Projection area size (XYZ)

Description of Check Criterion & Possible Molding Defects

<Summary>

Calculate the projection area size in each of the X, Y, and Z directions.

<Information>

Projected area is the sum of the areas of all the surfaces projected in each direction.

1. How to Check & Prerequisites

<How to Check>

Measure the projected area of the part in the X, Y, and Z direction.

<Prerequisites>

Geometry recognition is completed on ‘Draft direction’.

2. How to Judge & Default Value

<Default Value>

None

<How to Judge>

None

3. How to Analyze Check Result in Inspector / Model Viewer (Overview)

Inspection results will be listed in Item List of Inspector. The projected area in the X, Y, and Z direction of the part is displayed.

View operation command	Description
Highlight Checked Area	Target volume (part) is highlighted

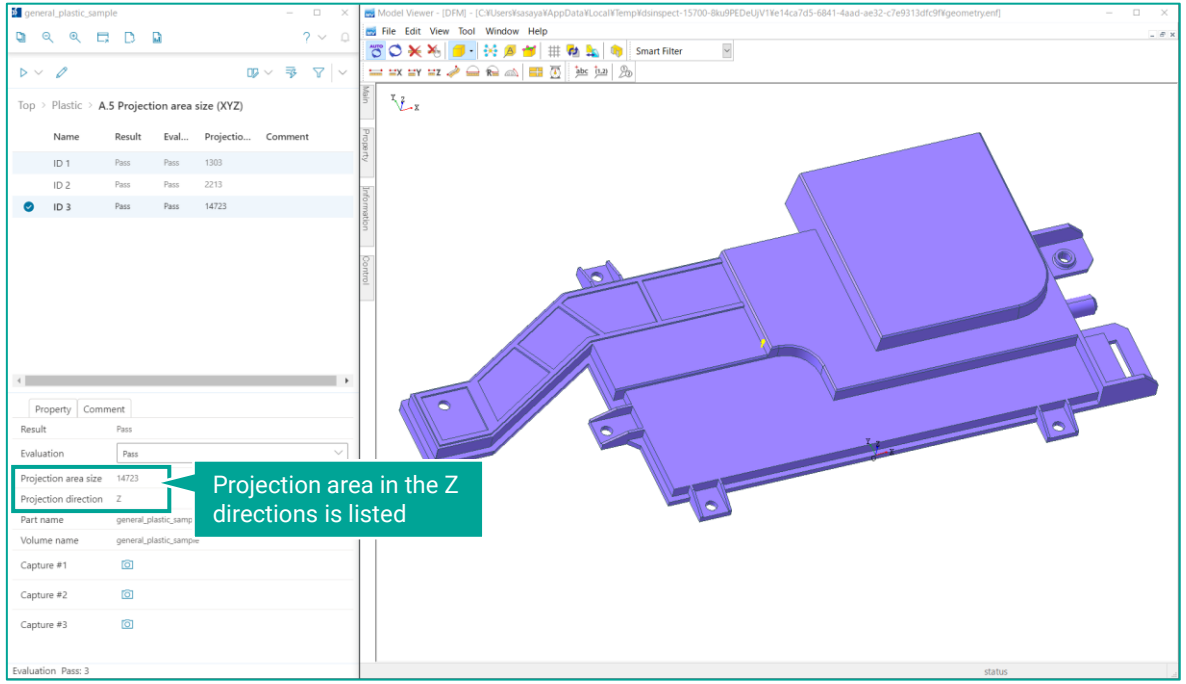

© 2022 Elysium – Confidential & Proprietary

Feature Recognition

Parameters and the Default Value

© 2022 Elysium – Confidential & Proprietary

Index: Feature Recognition

- Draft direction
- Round hole
- Fillet
- Boss
- Rib
- Wall thickness
- Wall thickness (Mold)
- Sharp edge
- Undercut
- Draft angle

© 2022 Elysium – Confidential & Proprietary

Geometry recognition: Draft direction

Description of Geometry Check

<Description>

Define draft direction and slide direction.

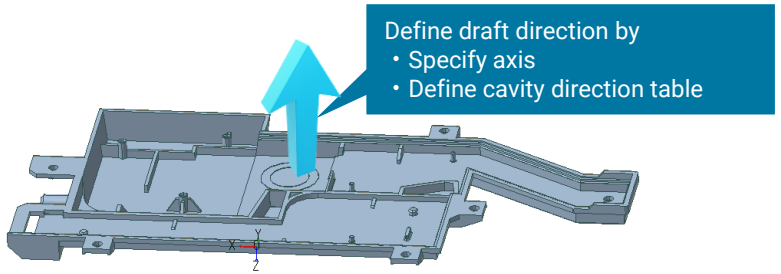

Properties

Property	Description
Cavity direction	If there is a coordinate system that matches CavityDirAxisName.Regex, +Z direction is recognized as the cavity direction and –Z direction is recognized as the core direction. If it doesn't exist, value specified in the CavityDir.Table is used as the cavity direction.
Core direction	Opposite direction of the cavity direction.
Slide direction	If there is a coordinate system that matches SlideDirAxisName.Regex, +Z direction is recognized as the slide direction. If there are more than one, the +Z direction of all the coordinate system is recognized as slide direction. If it doesn't exist, value specified in the SlideDir.Table is used as the cavity direction. If you don't want to specify, please keep the table as empty (line{}).

1. Prerequisites

<Prerequisites>

Draft direction recognition parameters are specified.

2. Parameters

Parameter	Default Value	Description
Coordinate system for cavity direction calculation by regex name CavityDirAxisName.Regex	DIR_CAVI.*	Specify coordinate system name used when calculating the cavity direction with regular expression
Coordinate system for slide direction calculation by regex name SlideDirAxisName.Regex	DIR_SLIDE.*	Specify coordinate system name used when calculating the slide direction with regular expression
Coordinate system for inner slide direction calculation by regex name InnerSlideDirAxisName.Regex	DIR_INNER_SLIDE.*	Specify coordinate system name used when calculating the inner slide direction with regular expression
Cavity direction by table of vectors (X/Y/Z) CavityDir.Table	line{0.0,0.0,1.0}	Specify table (X,Y,Z) to be used when calculating the cavity direction
Slide directions by table of vectors (X/Y/Z) SlideDir.Table	line{1.0,0.0,0.0 | -1.0,0.0,0.0 | 0.0,1.0,0.0 | 0.0,-1.0,0.0}	Specify table (X,Y,Z) to be used when calculating the slide direction
Inner slide directions by table of vectors (X/Y/Z) InnerSlideDir.Table	line{1.0,0.0,0.0|-1.0,0.0,0.0|0.0,1.0,0.0|0.0,-1.0,0.0}	Specify table (X,Y,Z) to be used when calculating the inner slide direction
Sampling point interval for slide stroke distance calculation SlideStrokeCheckSamplePoint.Dist	1 mm	Specify the sampling point interval for the calculation of the slide stroke

© 2022 Elysium – Confidential & Proprietary

Geometry recognition: Round hole

Description of Geometry Check

<Description>

Extracts rotational surfaces (cylindrical or conical) that exist in the solid model and recognizes holes (concave shapes) with a diameter less than value set in 'Recognize round hole | Max. diameter tol'

- Can recognized round hole: Closed rotational surface and hole diameter is less than the maximum diameter set in 'Recognize round hole | Max. diameter tol'.
- Cannot recognize round hole: Rotational surface is not closed.

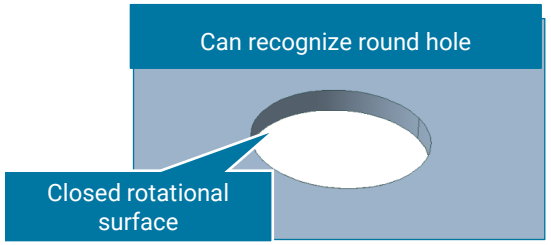

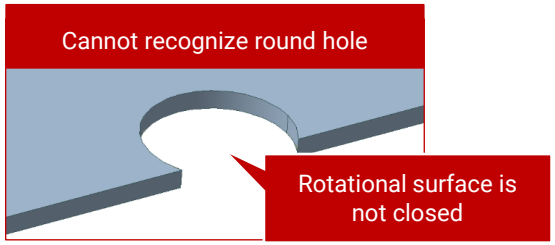

Properties

Property	Description
Hole face	Face recognize as a hole
Hole opening edge	Hole opening loop (edge)
Hole penetration edge	Hole penetration loop (edge)
Center coordinates	Coordinates of the maximum height of the hole opening on the hole shaft
Hole shaft	Hole face rotation axis
Chamfer width (c)	Axis length of the cone at the hole opening
Pilot hole diameter (d)	Twice the maximum radius of hole shaft axis to the hole face excluding the chamfer
Hole depth (l)	Length in the direction of the hole shaft for the face identified as a hole
Hole type	If there is a face recognized in the direction of the hole shaft, it is a through hole; otherwise, it is a blind hole

1. Prerequisites

<Prerequisites>

It is a solid model.

2. Parameters

Parameter	Default Value	Description
Recognize round hole | Max. diameter tol RecognizeHoleDiameter.Max	100.0 mm	Specify the maximum hole diameter for recognition
Recognize round hole | Max. chamfer width tol RecognizedChamferWidth.Max	2.0 mm	Specify the maximum chamfer width for recognition
Recognize round hole | Min. chamfer angle tol RecognizedChamferAngle.Min	30.0°	Specify the minimum chamfer angle for recognition

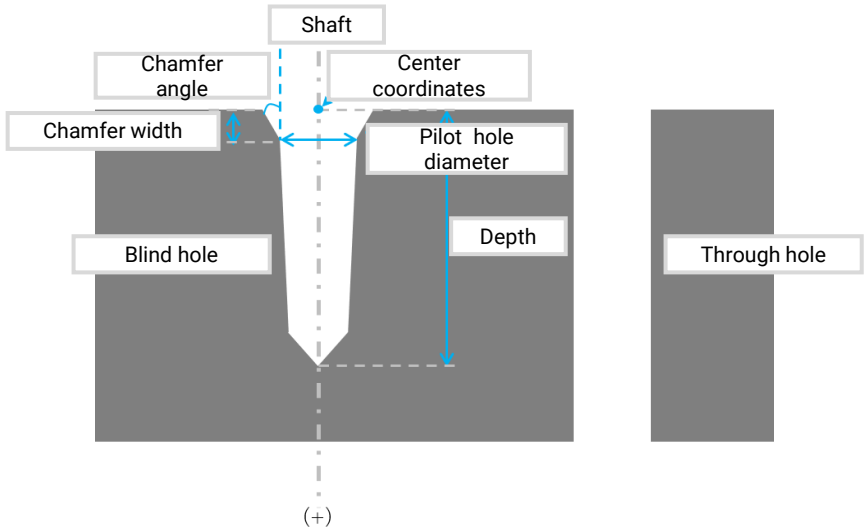

© 2022 Elysium – Confidential & Proprietary

Geometry recognition: Fillet

Description of Geometry Check

<Description>

Recognize fillets (concave or convex) in a solid model that are less than the value set in 'Recognize fillet | Max. radius tol'.

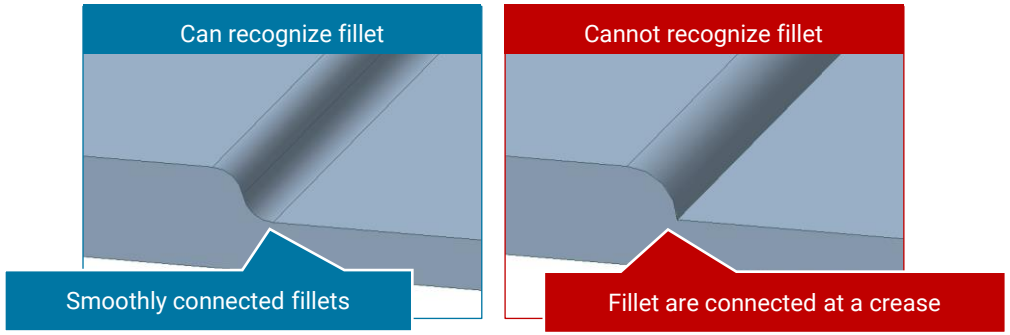

Properties

Property	Description
Fillet type	Concave or Convex
Fillet largest R	Largest R of the fillet
Fillet smallest R	Smallest R of the fillet
Fillet central angle	Max. central angle in fillet

1. Prerequisites

<Prerequisites>

It is a solid model.

2. Parameters

Parameter	Default Value	Description
Recognize fillet | Max. radius tol RecognizedFilletRadius.Max	10.0 mm	Specify the maximum fillet radius for recognition

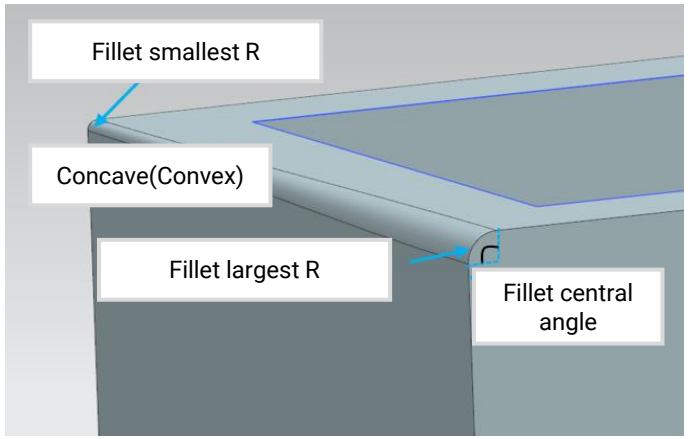

© 2022 Elysium – Confidential & Proprietary

Geometry recognition: Boss

Overview

Bosses that satisfy the following conditions will be recognized.

- Outer diameter at the base of the boss is less than or equal to the 'Recognize boss | Max. outer diameter tol'
- Height of the boss is equal to or greater than the 'Recognize boss | Min. height tol'
- Draft angle of the boss is less than or equal to the 'Recognize boss | Max. draft angle tol'.
- Rotation angle of the side of the boss is equal to or greater than the 'Recognize boss | Min. central angle tol'.

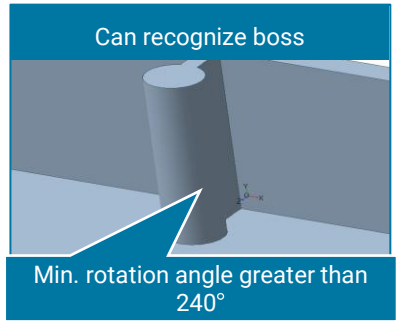

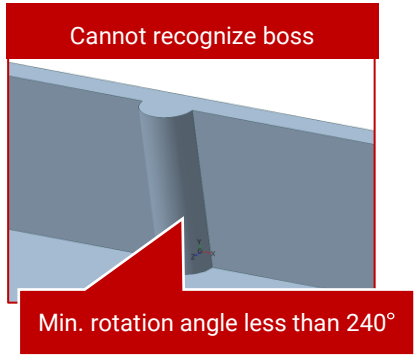

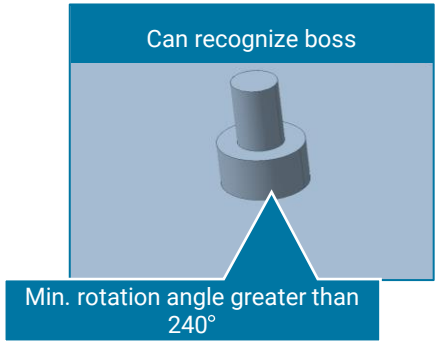

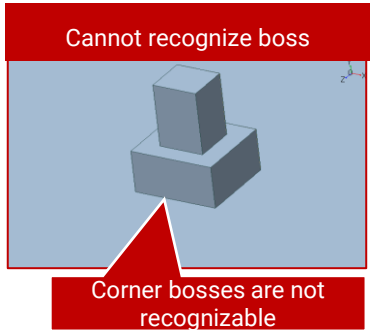

Prerequisites

It is a solid model.

Parameter Name	Initial Value	Details
Recognize boss | Max. outer diameter tol RecognizedBossDiameter.Max	50.0mm	Specify the maximum outer diameter of the boss for recognition
Recognize boss | Min. height tol RecognizedBossHeight.Min	0.5mm	Specifies the minimum height of the boss for recognition
Recognize boss | Max. draft angle tol RecognizedBossDraftAngle.Max	5.0°	Specifies the maximum draft angle of the boss for recognition
Recognize boss | Min. central angle tol RecognizedBossRotateAngle.Min	240.0°	Specifies the minimum central angle of the boss for recognition

© 2022 Elysium – Confidential & Proprietary

Geometry recognition: Boss

Property Name	Details of the Recognition Result
Boss face	Face identified as boss • Top face of boss • Tip fillet radius face of boss • Side face of boss • Root face of boss
Boss axis	Boss face's rotation axis
Boss hole face	Round hole face on boss axis
Boss tip fillet radius	Fillet radius size at boss tip
Boss root fillet radius	Fillet radius size at the boss root
Boss max. Height	Max. height at the boss axis when boss tip fillet radius and root fillet radius are not present
Boss min. Height	Min. height at the boss axis when boss tip fillet radius and root fillet radius are not present
Outer diameter of boss tip	Boss tip diameter when boss tip fillet radius and root fillet radius are not present
Outer diameter of boss base	Boss root diameter when boss tip fillet radius and root fillet radius are not present
Boss inner diameter	Diameter of the hole in the top of the boss (when it is not solid)
Boss draft angle	Boss side face's draft angle
Boss tip width	Shortest distance between the circumference of the boss top surface and the opening of the hole in the boss top surface
Boss side thickness (t)	Max. thickness of the boss hole (excluding tip) and the side wall of the boss
Boss bottom thickness (T)	Max. thickness at the bottom of the boss hole
Boss base thickness (BT)	Max. thickness at the root of the boss

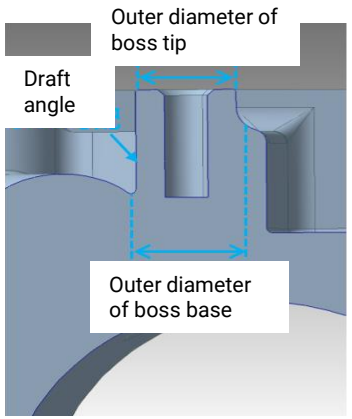

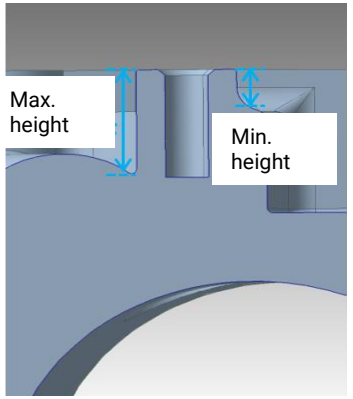

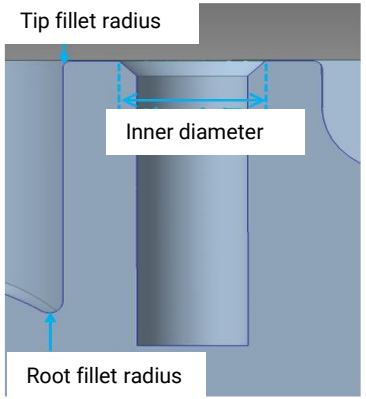

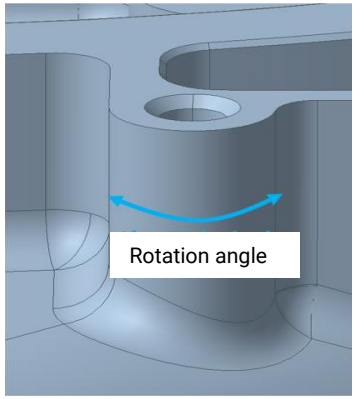

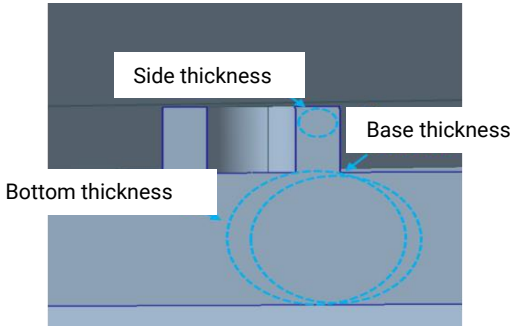

© 2022 Elysium – Confidential & Proprietary

Geometry recognition: Rib

Overview

Ribs that satisfy the following conditions will be recognized

- Width at the base of the ribs must be less than or equal to the 'Recognize rib | Max. width tol'.
- Height must be greater than or equal to the 'Recognize rib | Max. width tol' and less than or equal to the 'Recognize rib | Max. height tol'.
- Draft angle must be less than or equal to the 'Recognize rib | Max. draft angle tol'.

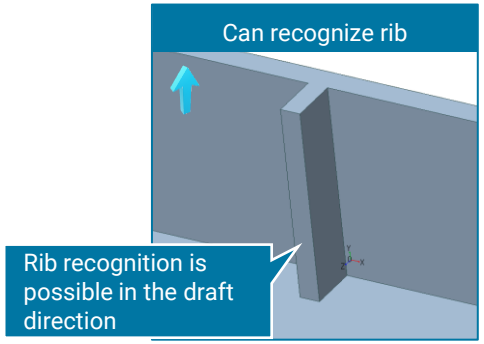

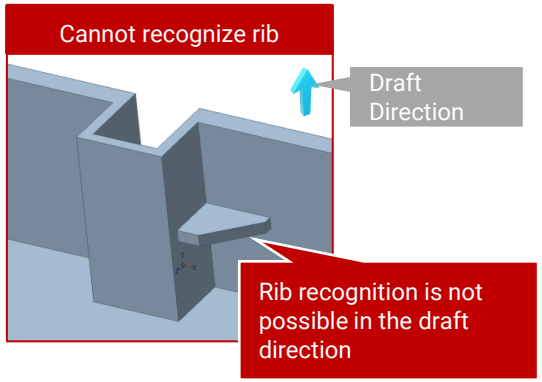

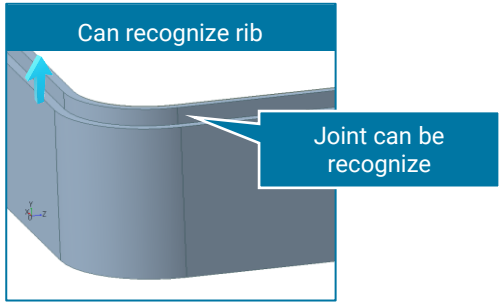

Prerequisites

It is a solid model. 'Draft direction' is recognized.

Parameter Name	Initial Value	Details
Recognize rib | Max. width tol RecognizedRibWidth.Max	5.0mm	Specifies the max. width of the ribs for recognition
Recognize rib | Min. height tol RecognizedRibHeight.Min	0.5mm	Specifies the min. height of the ribs for recognition
Recognize rib | Max. height tol RecognizedRibHeight.Max	30mm	Specifies the max. height of the ribs for recognition
Recognize rib | Max. draft angle tol RecognizedRibDraftAngle.Max	5.0 °	Specifies the max. draft Angle of the ribs for recognition
Recognize rib | Section interval RibSection.Interval	0.2mm	Specify the interval between rib measurements

© 2022 Elysium – Confidential & Proprietary

Geometry recognition: Rib

Property Name	Details of the Recognition Result
Rib face	Face identified as rib • Top face of rib • Tip fillet radius face of rib • Side face of rib • Root fillet radius face of rib
Draft direction	Display the recognized draft direction. • If the draft direction is specified by a coordinate system, the name of the coordinate system is displayed • If the draft direction is specified by a table of values, it will display one of the following: 'cavity direction', 'core direction' or 'slide direction'
Rib tip fillet radius	Fillet radius size at each section view of the rib tip fillet radius face
Rib root fillet radius	Fillet radius size at each section view of the rib root fillet radius face
Rib max. Height	Specify the highest height in the section view of the rib face in the draft direction
Rib min. Height	Specify the shortest height in the section view of the rib face in the draft direction
Rib draft angle	Draft angle at the rib side face
Rib tip width	Min. width of the rib at each section view
Rib root width	Max. width of the rib root at each section view
Rib base thickness	Largest thickness at the root of the rib

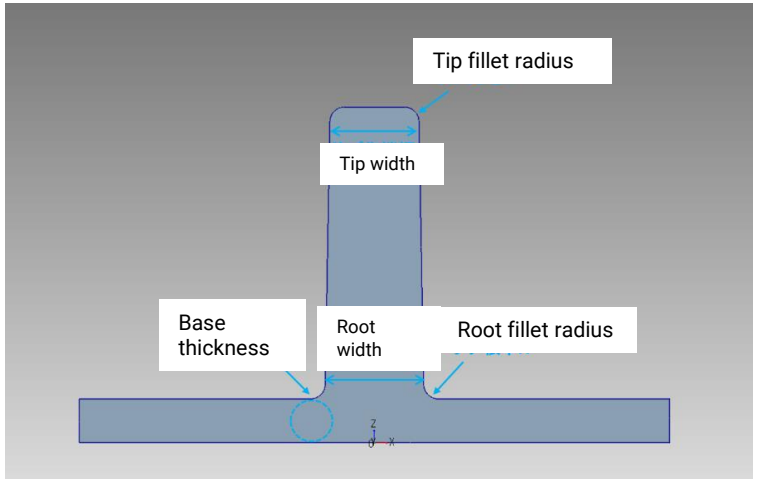

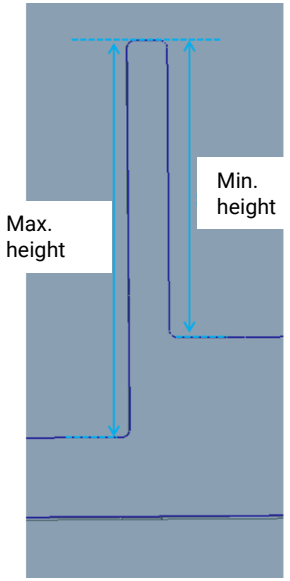

© 2022 Elysium – Confidential & Proprietary

Geometry recognition: Wall thickness

Description of Geometry Check

<Description>

Recognize the part where the central angle of the inscribed sphere is greater than the 'Target by min. angle tol between faces'.

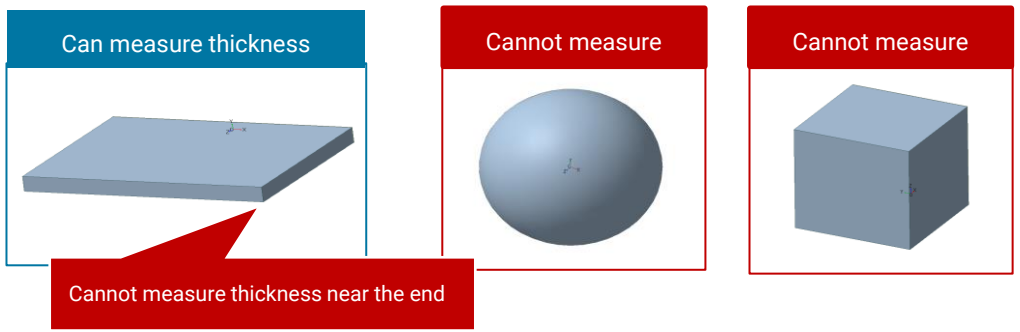

Properties

Property	Description
Measured Coordinate	Coordinate value of the measured thickness
Thickness	Diameter of inscribed sphere
Central Angle	Angle between the two points of the inscribed sphere and the center of the sphere

1. Prerequisites

<Prerequisites>

It is a solid model.

2. Parameters

Parameter	Default Value	Description
Wall thickness | Sampling point interval ThicknessSamplePoint.Dist	2.5 mm	Specify the density of sample points when measuring thick or thin areas.
Wall thickness | Max. thickness tol Thickness.LimitMaxValue	10	Specify the maximum thickness that can be measured
Wall thickness | Min. thickness tol Thickness.LimitMinValue	0.05	Specify the minimum thickness that can be measured
Wall thickness | Target by min. angle tol between faces StdThicknessNormalAngleDiff.Min	130.0°	Specify the minimum central angle when measuring the wall thickness.

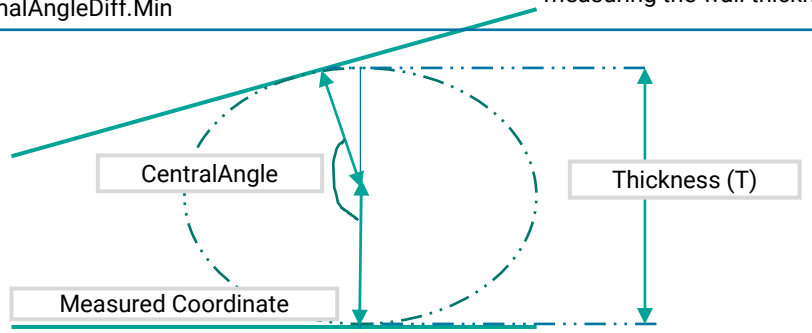

© 2022 Elysium – Confidential & Proprietary

Geometry recognition: Wall thickness (Mold)

Description of Geometry Check

<Description>

Recognizes the point where the angle difference between the raycast direction and the normal direction at the intersection is less than 'Wall thickness (mold) | Target by min. angle tol between faces'.

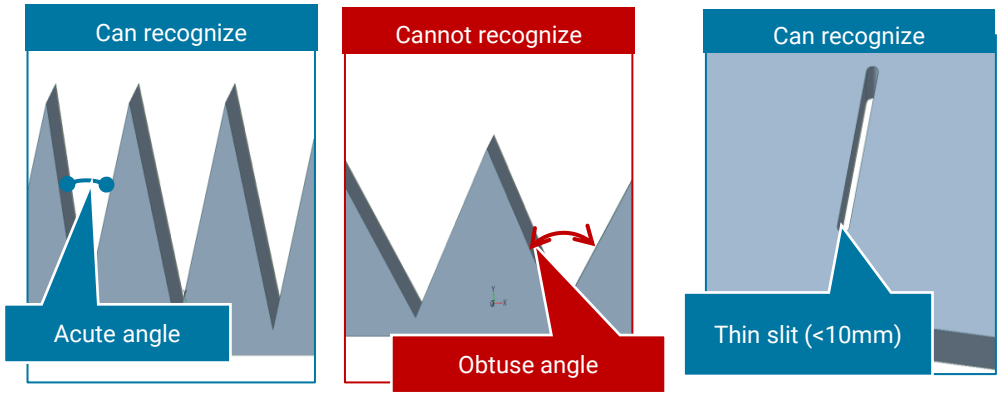

Properties

Property	Description
Coordinate	Coordinate value of the measured wall thickness (mold)
Wall thickness (Mold)	Length to the intersection when ray casting
Measured Angle	Angular difference between the two measurement points in the normal direction (ignoring the direction)

1. Prerequisites

<Prerequisites>

It is a solid model.

2. Parameters

Parameter	Default Value	Description
Wall thickness (Mold) | Sampling point interval ClearanceSamplePoint.Dist	2.5 mm	Specify the density of sample points when measuring wall thickness (mold)
Wall thickness (Mold) | Max. thickness tol Clearance.LimitMaxValue	10.0 mm	Specify the maximum wall thickness (mold) that can be measured
Wall thickness (Mold) | Min. thickness tol Clearance.LimitMinValue	0.1 mm	Specify the minimum wall thickness (mold) that can be measured

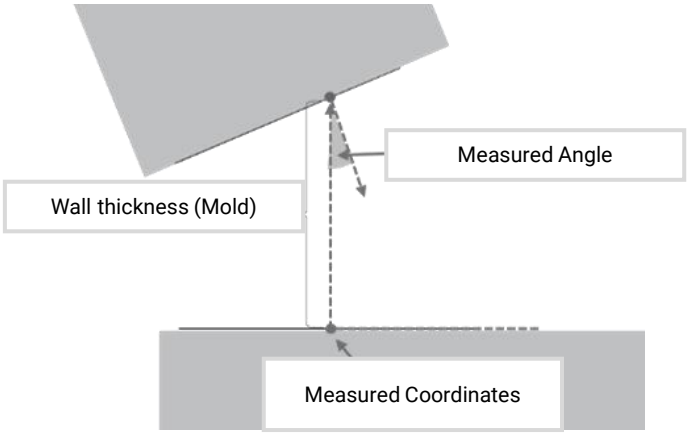

© 2022 Elysium – Confidential & Proprietary

Geometry recognition: Sharp edge

Description of Geometry Check

<Description>

Detect sharp edges that exist in the model (concave and convex).

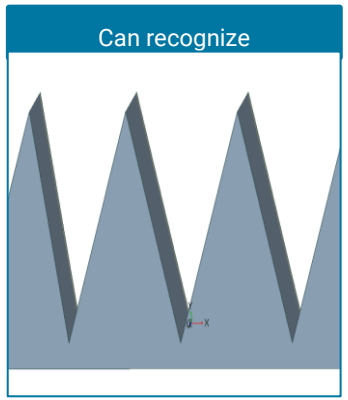

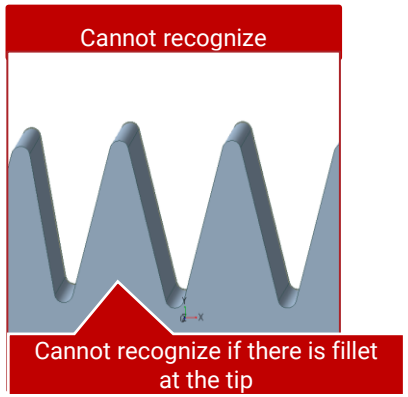

Properties

Property	Description
Sharp edge length	Length of the sharp edge
Sharp edge angle	Min. angle between faces that share a sharp edge

1. Prerequisites

<Prerequisites>

It is a solid model.

2. Parameters

Parameter	Default Value	Description
Sharp edge | Min. edge length tol SharpEdgeLength.Min	0.5mm	Specify the minimum edge length of a recognizable sharp edge

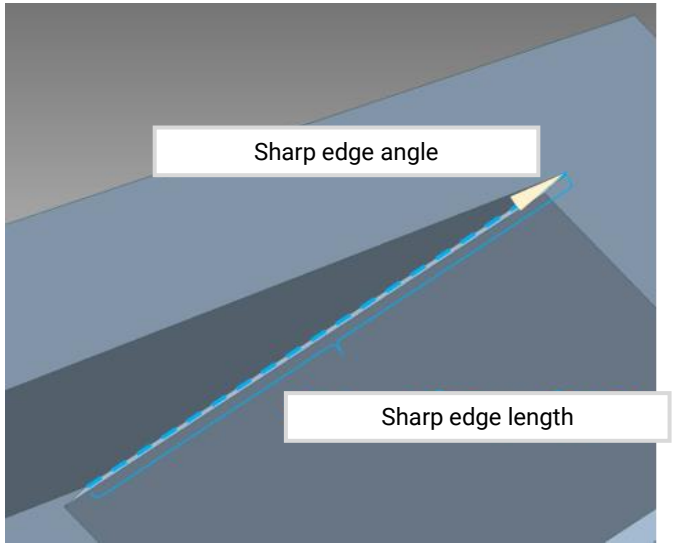

© 2022 Elysium – Confidential & Proprietary

Geometry recognition: Undercut

Description of Geometry Check

<Description>

Detects the undercut in the draft direction of the model.

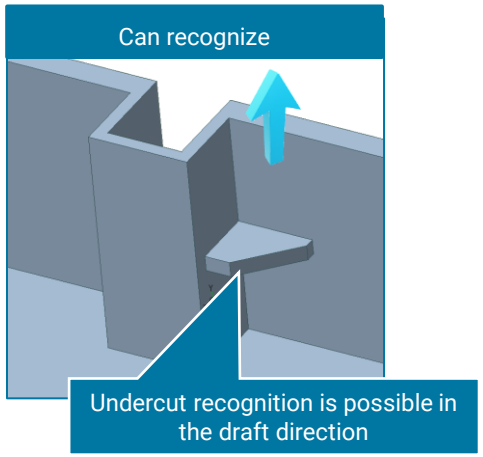

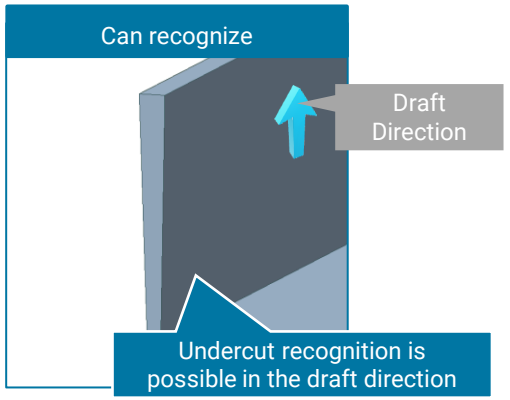

Properties

Property	Description
Undercut Section	Undercut portion
Undercut Area	Surface area of undercut area

1. Prerequisites

<Prerequisites>

It is a solid model. Geometry recognition is completed on 'Draft direction'

2. Parameters

Parameter	Default Value	Description
Detect undercut | Min. area tol UndercutMeshArea.Min	0.1 mm^2	Specifies the minimum area of undercut for recognition

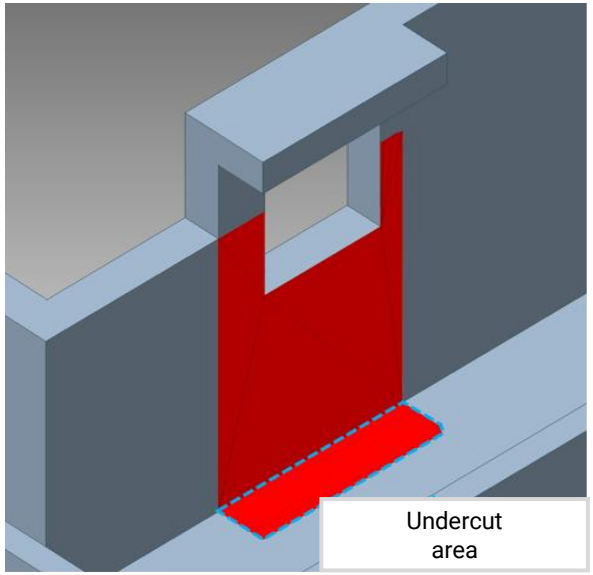

© 2022 Elysium – Confidential & Proprietary

Geometry recognition: Draft angle

Description of Geometry Check

<Description>

Draft angle is calculated based on the draft direction.

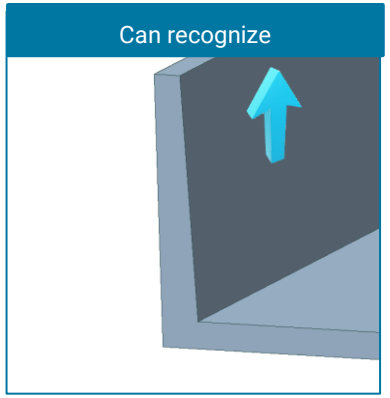

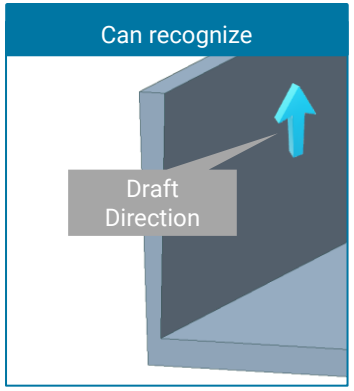

Properties

Property	Description
Draft angle	Draft angle with respect to the draft direction

1. Prerequisites

<Prerequisites>

It can recognize 'Draft direction'

2. Parameters

Parameter	Default Value	Description
Draft angle | Sampling point interval DraftAngleSamplePoint.Dist	3.0 mm	Specify the density of sample points when measuring draft angle

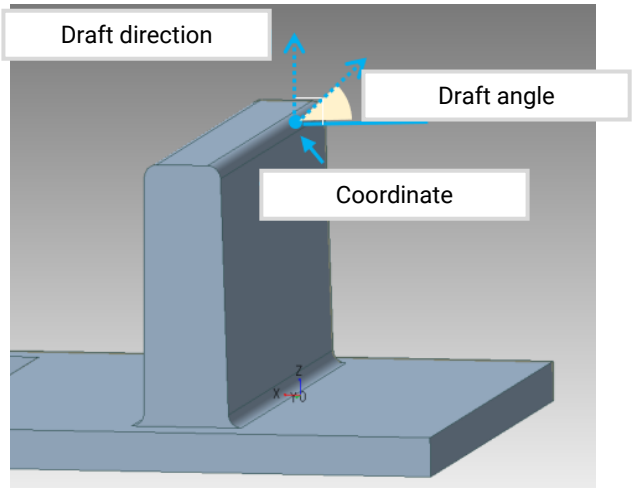

© 2022 Elysium – Confidential & Proprietary

Appendix

How to Edit Parameter Settings

© 2022 Elysium – Confidential & Proprietary

How to Edit Parameter Settings

You can use Parameter Settings Tool to edit parameter values.

In case you edit the parameter files (*.ini) directly, the format is as shown below.
Please confirm the correspondence between the check criteria name and the section key in Parameter Settings Tool.

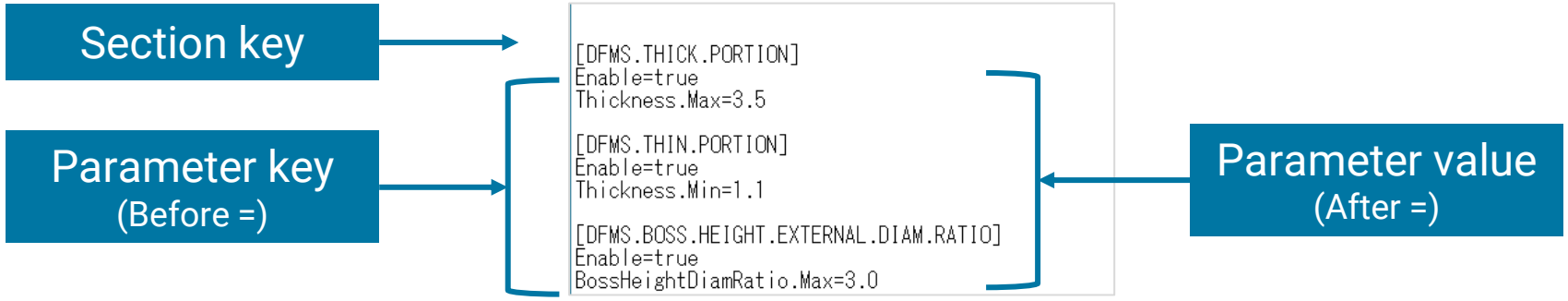

Following parameters are common throughout all check items.

<Specifying the target part>
Edit in the [DFMS.TARGET.RECOGNITION] section. Specify using regular expression.
You can check a specific part within an assembly model if you use this parameter.

[DFMS.TARGET.RECOGNITION]
TargetPartName.Regex=.*

<Specify whether to run or skip the inspection>
Run inspection: Enable=true
Skip inspection: Enable=false

© 2022 Elysium – Confidential & Proprietary

All rights reserved by Elysium or the original author of this material. The content may not be edited, reproduced, distributed, transmitted, displayed, published, broadcast, sold or lent without the prior permission of the author.

ELYSIUM

© 2022 Elysium – Confidential & Proprietary